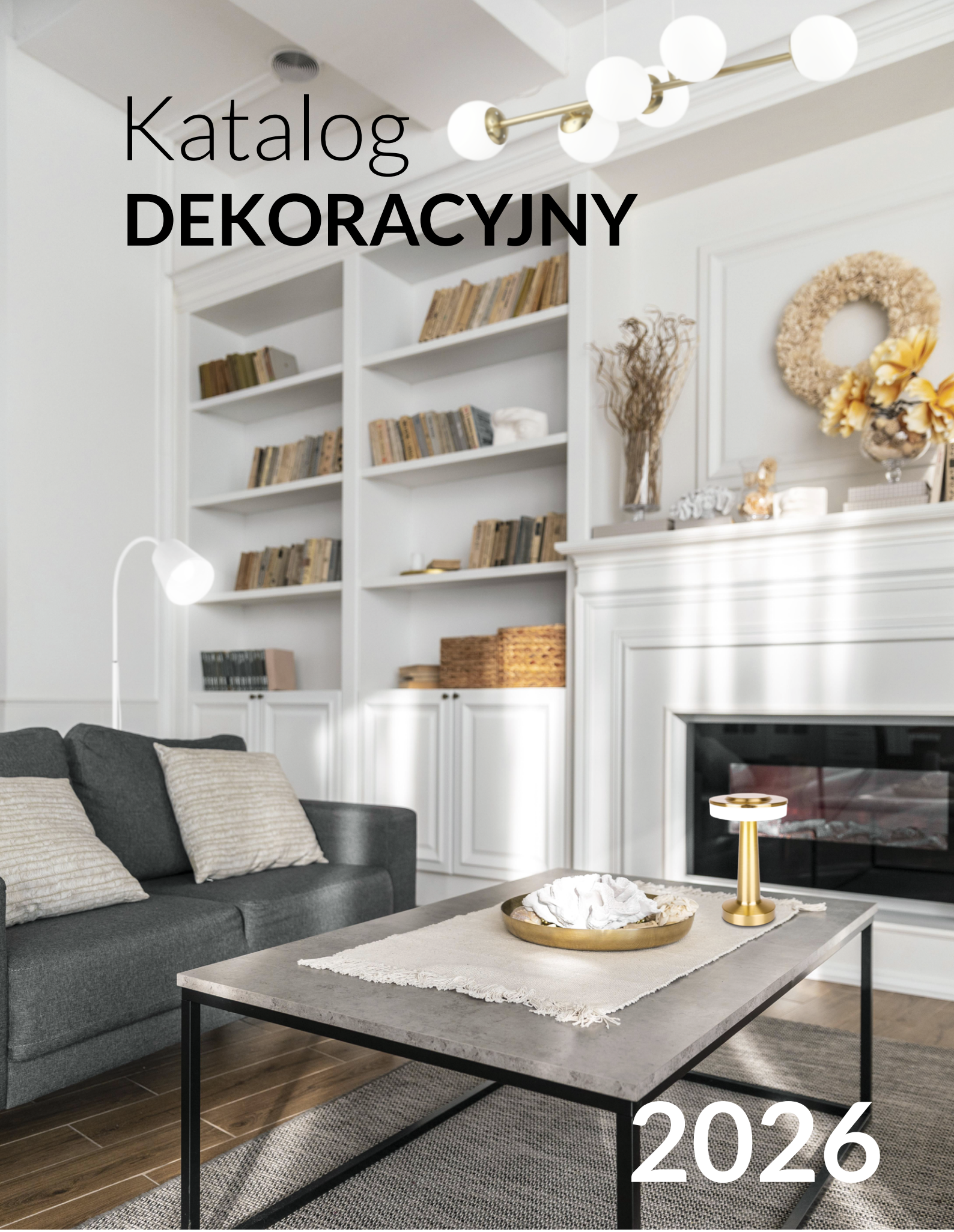

Katalog
DEKORACYJNY

2026

lvt.com.pl

Spis treści / Table of contents / Inhaltsverzeichnis / Tartalomjegyzék:


Żyrandole LED / LED chandeliers / LED-Kronleuchter / LED csillárok 2


Lampy wiszące / LED pendant light / Hängelampen / Függő lámpák 20


Oprawy wiszące / Pendant light / Hängeleuchten / Függő kötés 32


Kinkiety / Wall lamp / Wandlampen / Fali lámpák 59


Kinkiety do czytania / Reading wall lamp / Lesewandlampen / Olvasó fali lámpák 113


Oprawy natynkowe / Surface fixtures / Anbauleuchten / Felületi lámpatestek 120


Oprawy halogenowe / Halogen fixtures / Halogenleuchten / Halogén lámpatestek 137


Plafony / Ceiling lamps / Deckenleuchten / Mennyezeti lámpák 141


Kinkiety nad lustro / Ceiling lamp above the mirror / Wandlampen über dem Spiegel 175
/ Fali lámpák a tükör felett


Lampy podłogowe LED / LED Floor lamps / LED-Stehlampen / LED állólámpák 181


Lampy biurkowe LED / LED desk lamp / LED-Schreibtischlampen / LED asztali lámpák 187


Lampy LED akumulatorowe / Rechargeable LED lamps / Wiederaufladbare LED-Lampen 199
/ Újratölthető LED lámpák


Lampy dziecięce LED / Children's LED lamps / LED-Kinderlampen / LED-es gyereklámpák 203


Żarówki LED / LED light bulbs / LED-Glühbirnen / LED izzók 208

Znaczenie symboli / Meaning of symbols / Meaning of symbols / A szimbólumok jelentése:

Kąt świecenia / Beam angle / Abstrahlwinkel / Sugárszög (°)

Napięcie wejściowe / Input voltage / Eingangsspannung / Bemeneti feszültség

Napięcie wyjściowe / Output voltage / Ausgangsspannung / Kimeneti feszültség

Materiał wykonania / Material of manufacture / Herstellungsmaterial / Gyártási anyag (mm)

Klasa odporności / Resistance class / Widerstandsklasse / Ellenállási osztály (IP)

Otwór montażowy / Mounting hole / Befestigungsloch / Rögzítőfurat (mm)

Wielkość klosza / Lampshade size / Lampenschirmgröße / Lámpabúra mérete (mm)

Należy dokupić / Add to purchase / Zum Kauf hinzufügen / Hozzáadás a vásárláshoz

Wymiary / Dimensions / Maße / Méretek (mm)

Kolor / Color / Farbe / Szín

Barwa światła / Light color / Lichtfarbe / Világos szín (K)

Jasność światła / Brightness of light / Helligkeit des Lichts / A fény erőssége (lm)

Okrąg | kwadrat / Circle | square / Kreis | Quadrat / Kör | négyzet

Moc | Natężenie / Power | Intensity / Leistung | Intensität / Teljesítmény | Intenzitás (W)

Bateria / Battery / Batterie / Akkumulátor

Kabel / Cable / Kabel / Kábel

Źródło światła / Light source / Lichtquelle / Fényforrás

Rodzaj żarówki / Type of bulb / Lampentyp / Izzó típusa

Sposób sterowania / Control method / Kontrollmethode / Szabályozási módszer

Metoda podłączenia / Connection method / Verbindungsmethode / Csatlakozási mód (LAN, WiFi)

Rodzaj gniazda / Type of socket Art der Steckdose / Aljzat típusa

Ściemnianie / Dimming / Verdunkelung / Sötétedés

Czujnik ruchu, zasięg detekcji / Motion sensor, detection range / Bewegungssensor, Erfassungsbereich / Mozgásérzékelő, érzékelési tartomány

Ładowanie QI / QI charging / QI-Laden / QI töltés

Próg zadziałania / Trigger threshold / Auslöseschwelle / Kioldási küszöb

Czas świecenia / Operating time / Arbeitszeit / Munkaidő

Dział żarówek / Light bulb department / Glühbirnenabteilung / Izzó osztály:

GU10

E14

E27

GX53

G9

zestaw żarówek / set of light bulbs / Satz Glühbirnen / izzók készlet



Żyrandole LED
LED chandeliers
LED-Kronleuchter
LED csillárok

SMD 2835	200-240V AC 50/60HZ	Steel + aluminium + PVC	RF 2.4G remote control	3000K - 6500K	IP20

Hodo LED CCT



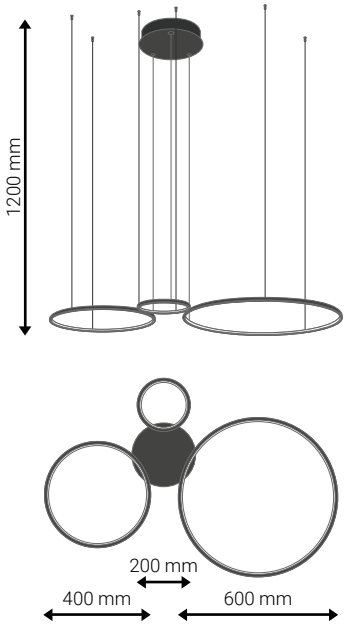

Index						EAN CODE
9802	max. 77W	10000lm	Ø200 + Ø400 + Ø600 x 1200 mm	Black	120°	5 904703 022947 >
9803				Gold		5 904703 022961 >

Hodo LED CCT



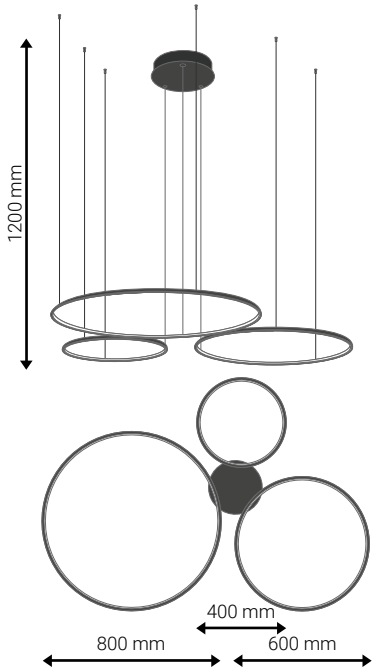

Index						EAN CODE
9799	max. 116W	max. 14000lm	Ø400 + Ø600 + Ø800 x 1200 mm	Black	120°	5 904703 022916 >
9800				Gold		5 904703 022930 >



Żyrandole LED
LED chandeliers
LED-Kronleuchter
LED csillárok

SMD 2835	200-240V AC 50/60HZ	Steel + aluminium + PVC	RF 2.4G remote control	3000K - 6500K	IP20

Coma LED CCT



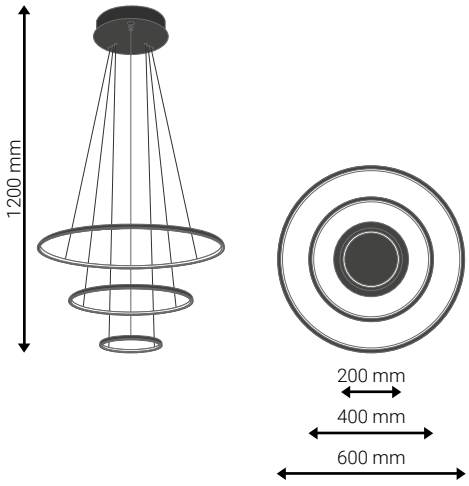

Index						EAN CODE
9796	max. 77W	max. 10000lm	Ø200 + Ø400 + Ø600 x 1200 mm	Black	320°	5 904703 022817 >
9797				Gold		5 904703 022824 >

Lynx LED CCT



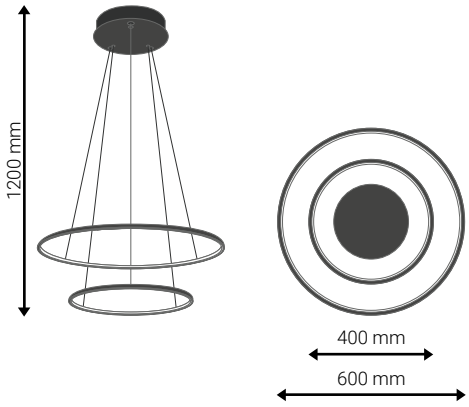

Index						EAN CODE
9804	max. 64W	max. 8000lm	Ø400 + Ø600 x 1200 mm	Black	120°	5 904703 022978 >
9805				Gold		5 904703 023005 >



Żyrandole LED
LED chandeliers
LED-Kronleuchter
LED csillárok

SMD 2835	200-240V AC 50/60HZ	Steel + aluminium + PC	RF 2.4G remote control	3000K - 6500K	IP20 IK03

Galaxis Livia

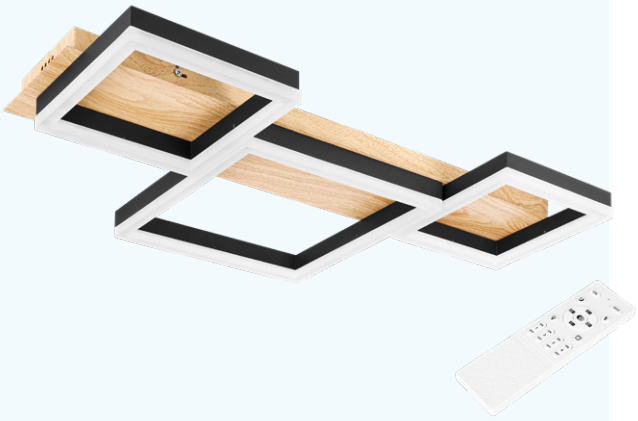

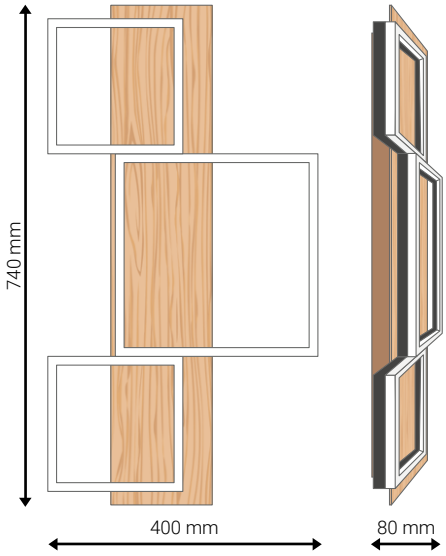

Index						EAN CODE
9533	max. 70W	max. 7700lm	740 x 400 x 80 mm	Black + wood	120°	5 904703 020875 >

Galaxis Herkules

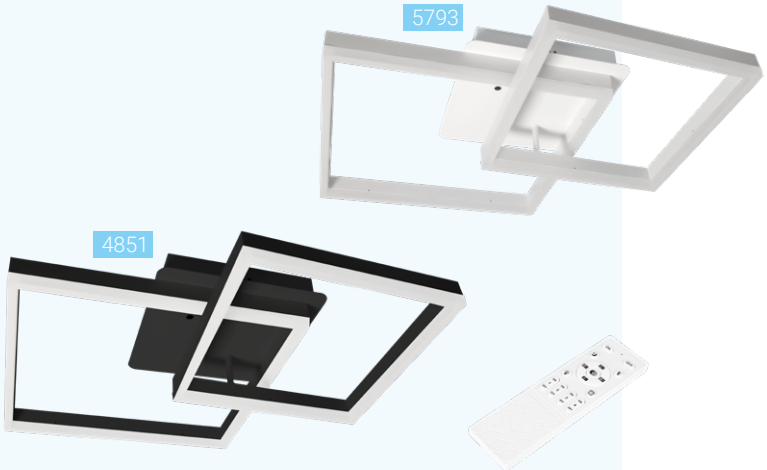

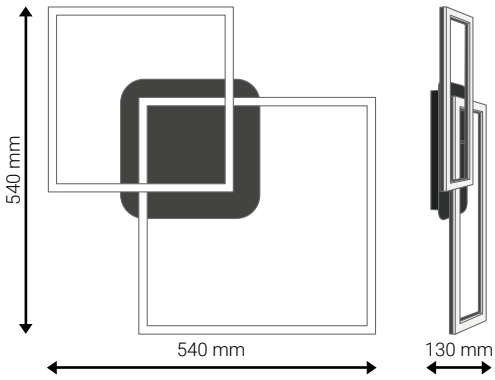

Index						EAN CODE
5793	max. 70W	max. 7700lm	540 x 540 x 130 mm	White	320°	5 908263 384286 >
4851				Black		5 908263 384279 >

SMD 2835	200-240V AC 50/60HZ	Steel + aluminium + PC	RF 2.4G remote control	3000K - 6500K	IP20 IK03

Galaxis Polaris

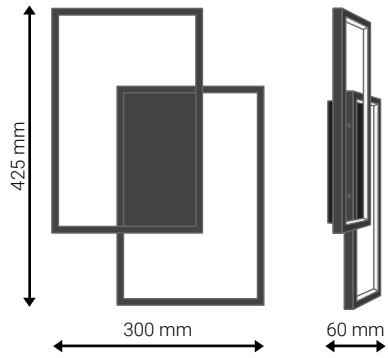

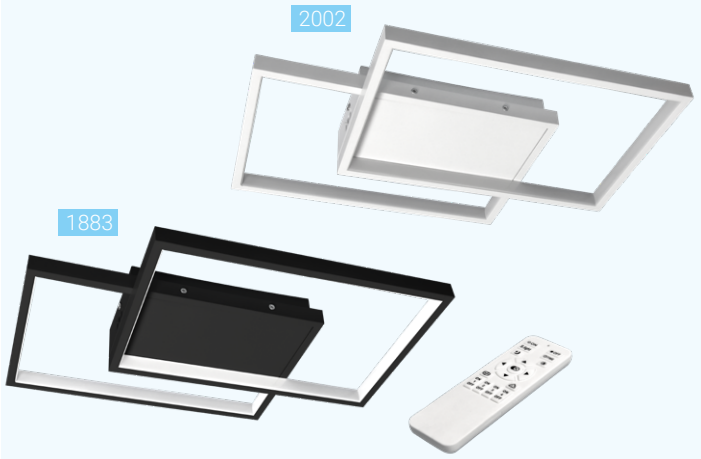

Index						EAN CODE
2002	max. 45W	max. 4950lm	425 x 300 x 60 mm	White	320°	5 908263 384118 >
1883				Black		5 908263 384101 >

Galaxis Orion

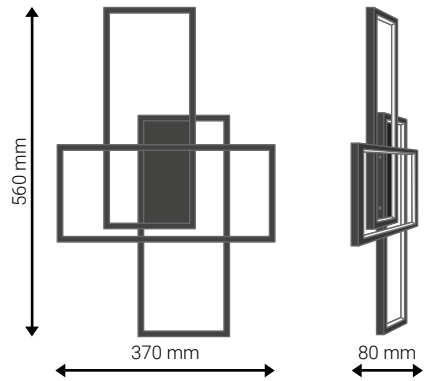

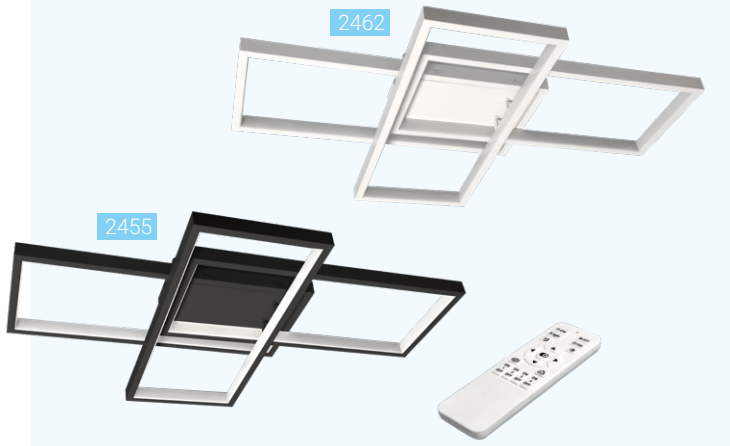

Index						EAN CODE
2462	max. 72W	max. 7920lm	560 x 370 x 80 mm	White	320°	5 908263 384132 >
2455				Black		5 908263 384125 >

Żyrandole LED
LED chandeliers
LED-Kronleuchter
LED csillárok

SMD 2835	165-240V AC 50/60HZ	Steel + aluminium + PC	RF 2.4G remote control	3000K - 6500K	IP20 IK03

Galaxis Vela

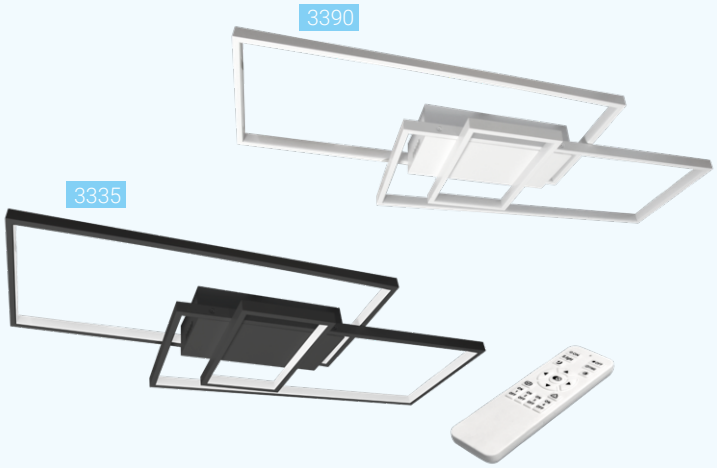

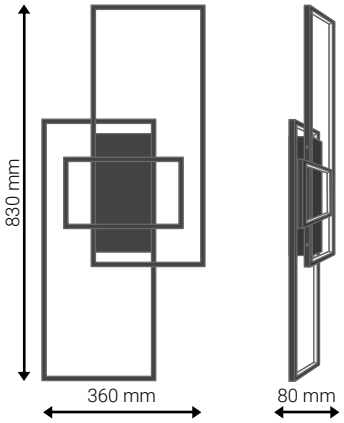

Index						EAN CODE
3390	max. 90W	max. 9900lm	830 x 360 x 80 mm	White	320°	5 908263 384194 >
3335				Black		5 908263 384187 >

Galaxis Hydra

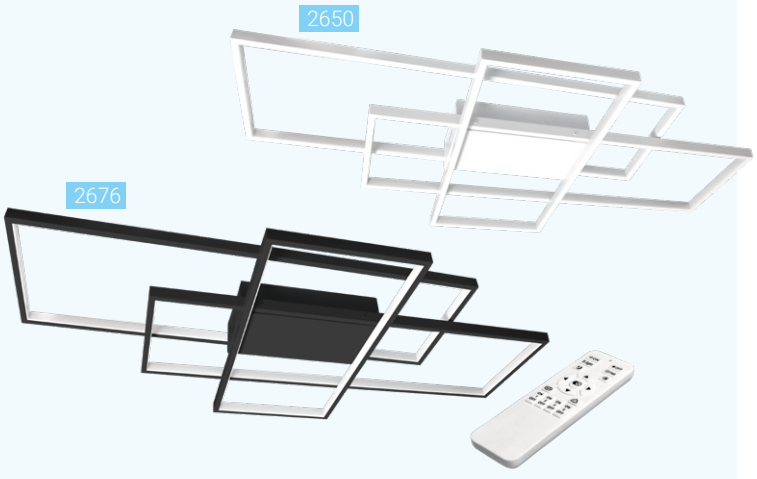

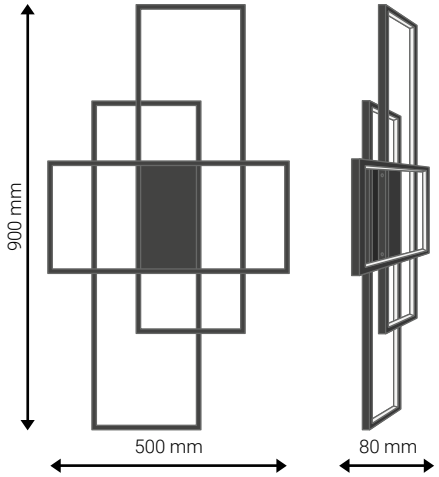

Index						EAN CODE
2650	max. 126W	max. 13860lm	900 x 500 x 80 mm	White	320°	5 908263 384149 >
2676				Black		5 908263 384156 >

SMD 2835	165-240V AC 50/60HZ	Steel + aluminium + PC	RF 2.4G remote control	3000K - 6500K	IP20 IK03

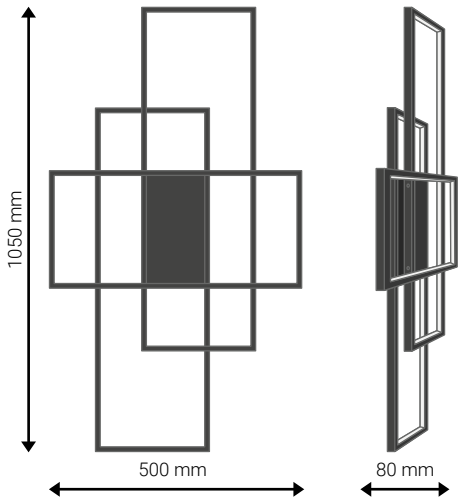

Galaxis Pegaz

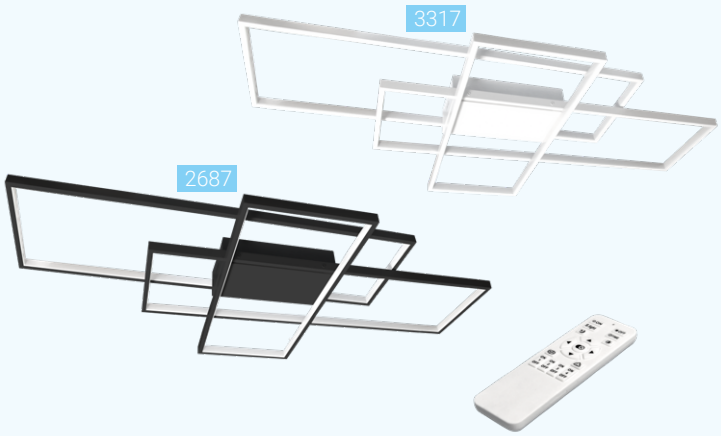

Index						EAN CODE
3317	max. 130W	max. 14300lm	1050 x 500 x 80 mm	White	320°	5 908263 384170 >
2687				Black		5 908263 384163 >



Żyrandole LED
LED chandeliers
LED-Kronleuchter
LED csillárok

SMD 2835	200-240V AC 50/60HZ	Steel + aluminium + PCV	3000K - 6000K (change using a DIP switch)	IP20

Moris LED CCT



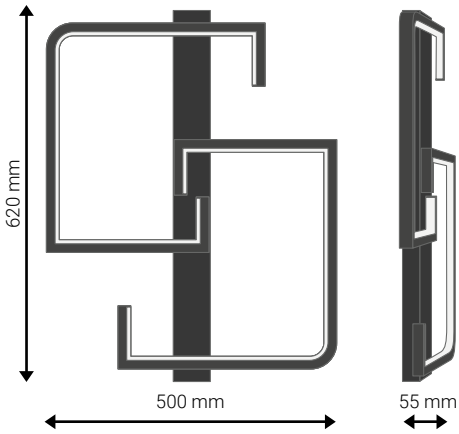

Index						EAN CODE
9834	29W	3800lm	620 x 500 x 55 mm	White	120°	5 904703 023142 >
9833				Black		5 904703 023135 >



SMD 2835	220-240V AC 50/60HZ	Steel + aluminium + PVC + wood	4000K	IP20

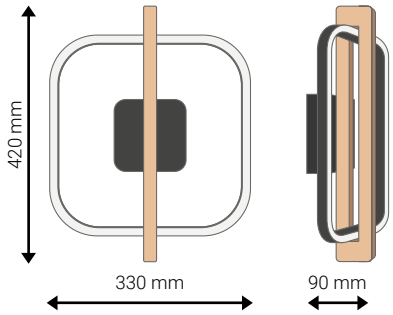

Privio LED

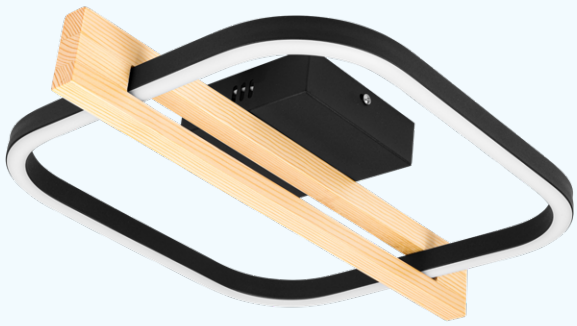

Index						EAN CODE
9542	16W	1500lm	420 x 330 x 90 mm	Black + wood	120°	5 904703 020950 >



Żyrandole LED
LED chandeliers
LED-Kronleuchter
LED csillárok

SMD 2835	200-240V AC 50/60HZ	Steel + aluminium + PC	4000K	IP20 IK07

Modena Loria



adjustable chandelier arm system

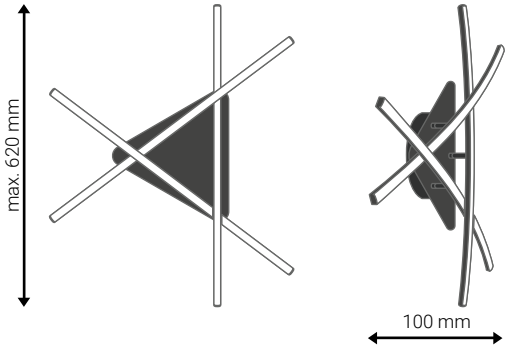

Index						EAN CODE
1397	29W	1740lm	Ø620 x 100 mm	Black	180°	5 908263 385795 >

Modena Grando

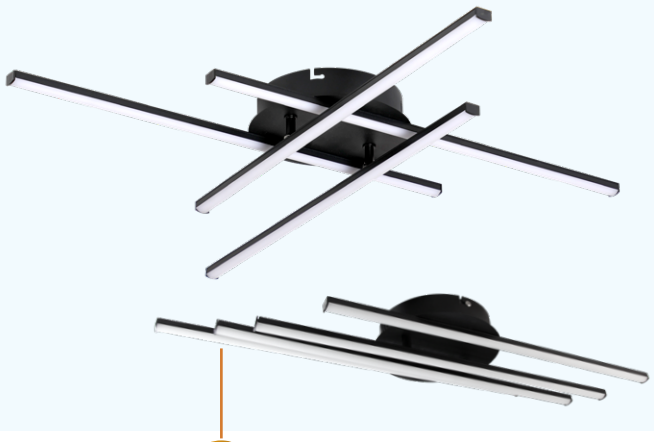

adjustable chandelier arm system

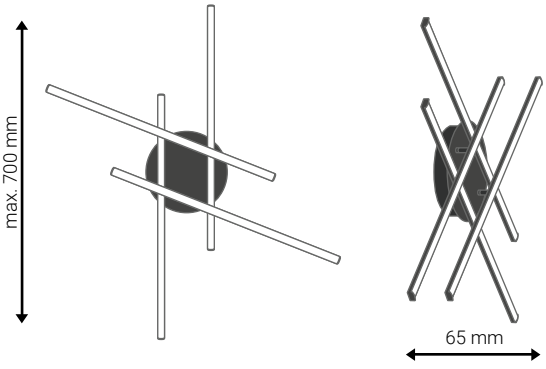

Index						EAN CODE
7120	34W	2040lm	Ø700 x 65 mm	Black	180°	5 908263 385832 >

100-240V AC 50/60HZ	Steel + glass	IP20	Gold	Ø120 x 105 mm



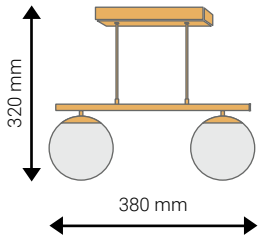

Bali LED E27



Index			EAN CODE
9785	2x E27 (max. 35W)*	380 x 120 x 320 mm	5 904703 022879 >

*not included



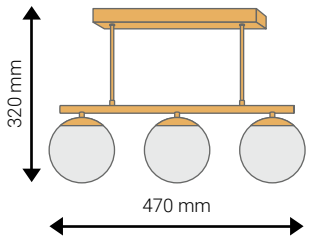

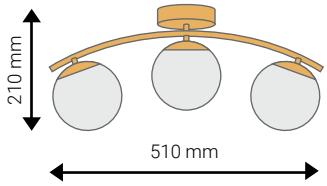

Bali LED E27

9784



9786



Index			EAN CODE
9784	3x E27 (max. 35W)*	470 x 120 x 320 mm	5 904703 022862 >
9786		510 x 120 x 210 mm	5 904703 022886 >

*not included

Żyrandole LED
LED chandeliers
LED-Kronleuchter
LED csillárok

100-240V AC 50/60HZ	Steel + glass	IP20	Ø120 x 105 mm

Bali LED E27



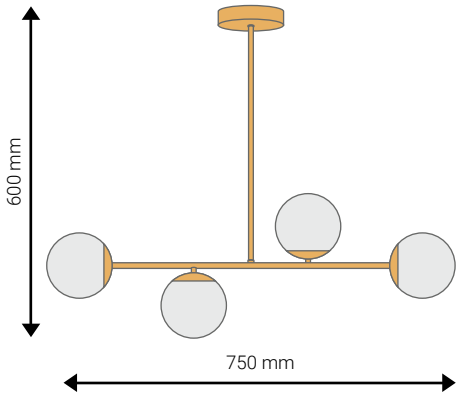

Index				EAN CODE
9782	4x E27 (max. 35W)* *not included	750 x 120 x 600 mm	Gold	5 904703 022848 >

Bali LED E27

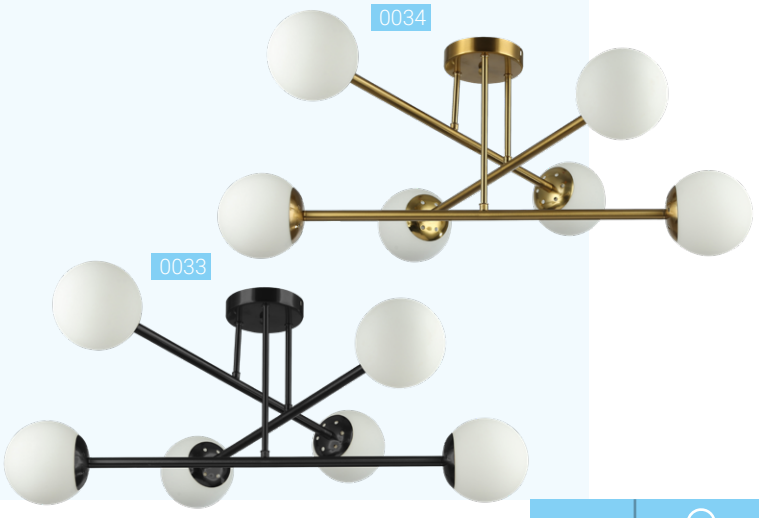

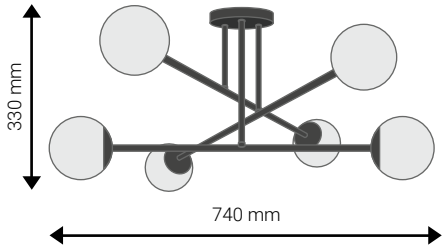

Index				EAN CODE
0033	6x E27 (max. 35W)* *not included	740 x 740 x 330 mm	Black	5 904703 015345 >
0034			Gold	5 904703 015352 >

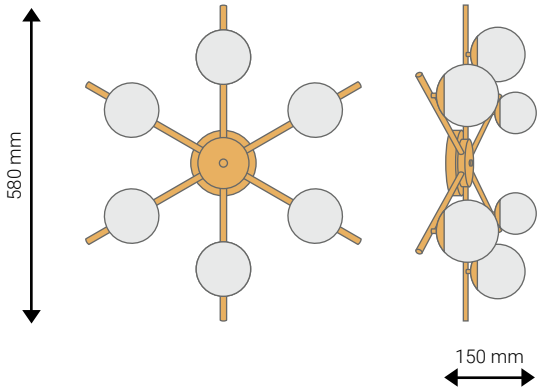



Bali

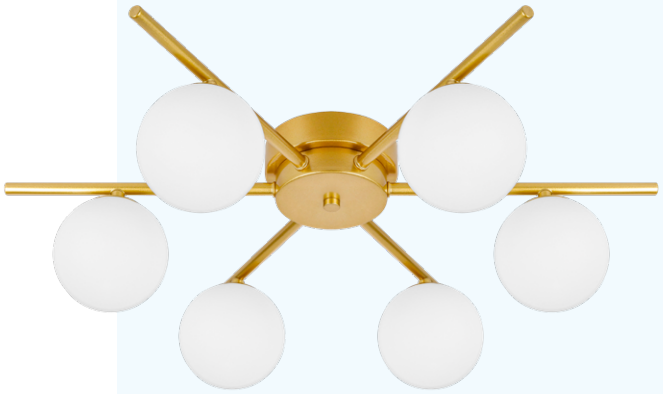

Index								EAN CODE
9534	6x G9 (max. 20W)* *not included	100-240V AC 50/60HZ	Steel + glass	Ø580 x 150 mm	IP20	Gold	Ø100 x 100 mm	5 904703 020882 >

Glass lampshade

for chandeliers of the Bali series



Index					EAN CODE
9777	1x E27*	Glass milky	Ø150 x 150 mm	White	5 904703 022602 >
9100			Ø120 x 105 mm		5 904703 018339 >
9767	1x G9* *not included		Ø100 x 100 mm		5 904703 022565 >

Eliot E27



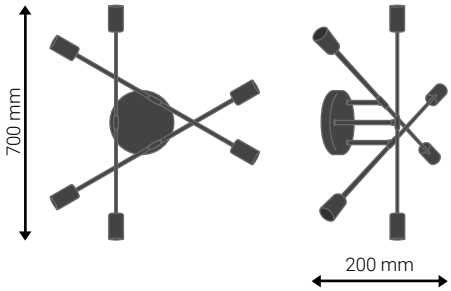

Index							EAN CODE
0035	100-240V AC 50/60HZ	6x E27 (max. 35W)*	Ø700 x 200 mm	Metal	Black	IP20	5 904703 015369 >

*not included



220-240V AC 50/60HZ	IP20

Zibo GX53

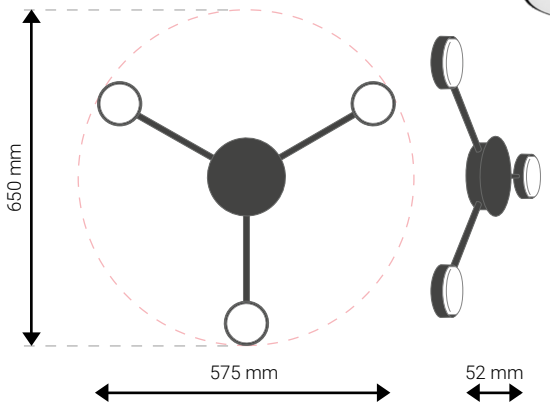





Index					EAN CODE
9485	3x GX53 (max. 15W)*	Ø650 x 52 mm	Aluminium + Steel	White	5 904703 019886 >
9486				Black	5 904703 018698 >

*not included

Guliver GX53

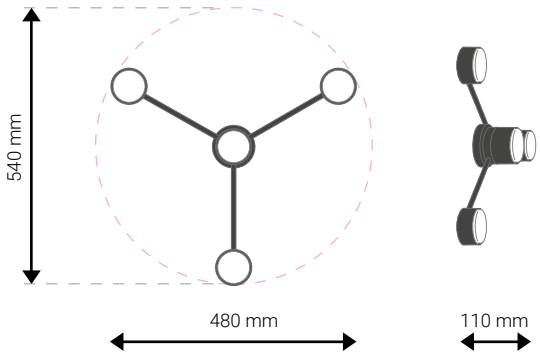



Index					EAN CODE
9477	4x GX53 (max. 12W)*	Ø540 x 110 mm	Steel + PC	Black	5 904703 018681 >

*not included

Żyrandole LED
LED chandeliers
LED-Kronleuchter
LED csillárok

110-240V AC 50/60HZ	IP20	Steel	Ø85 x 30 mm	Black

Zola GX53

4196



4203



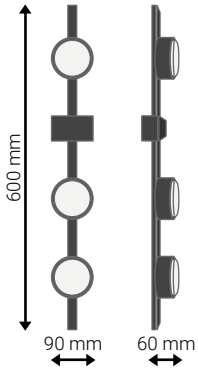

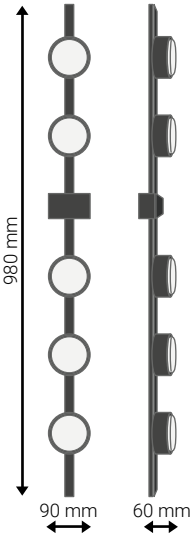

Index			EAN CODE
4196	3x GX53 (max. 30W)*	600 x 90 x 60 mm	5 904703 011002 >
4203	5x GX53 (max. 30W)*	980 x 90 x 60 mm	5 904703 011019 >

*not included



220-240V AC 50/60HZ	Aluminium + Steel	Ø55 x 100 mm	Black	IP20

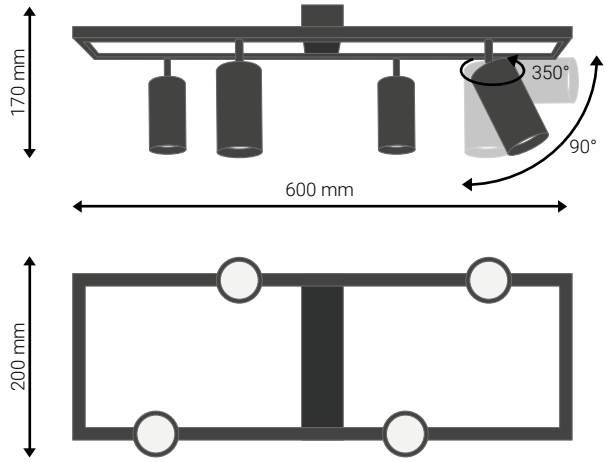

Bumo GU10

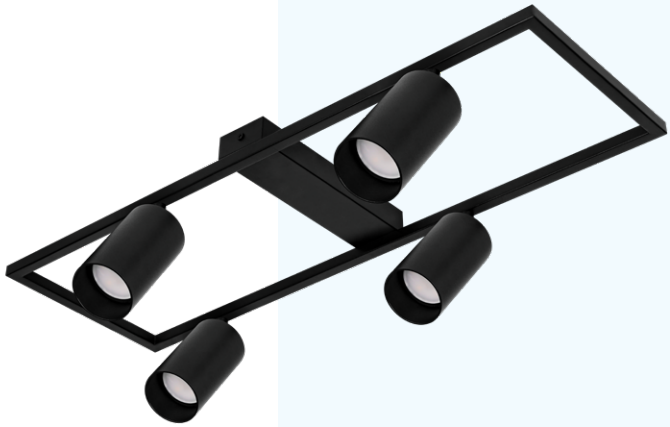

Index			EAN CODE
9481	4x GU10 (max. 35W)* *not included	600 x 200 x 170 mm	5 904703 020035 >

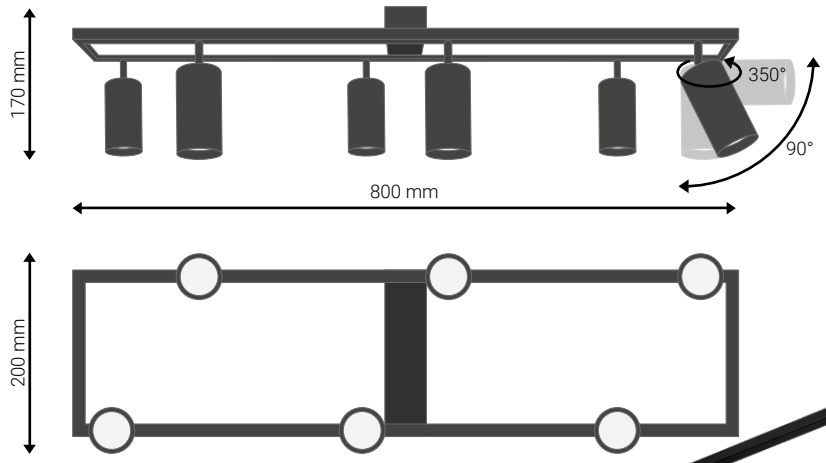

Bumo GU10



Index			EAN CODE
9540	6x GU10 (max. 35W)* *not included	800 x 200 x 170 mm	5 904703 020042 >

Lampy wiszące
LED pendant light
Hängelampen
Függő lámpák

SMD 2835 Epistar	190-260V AC 50/60HZ	Aluminium + PC	4500K	120°	IP40 IK08

OSD

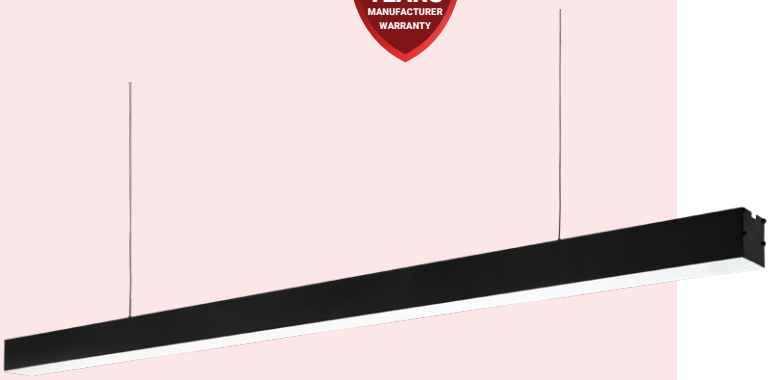

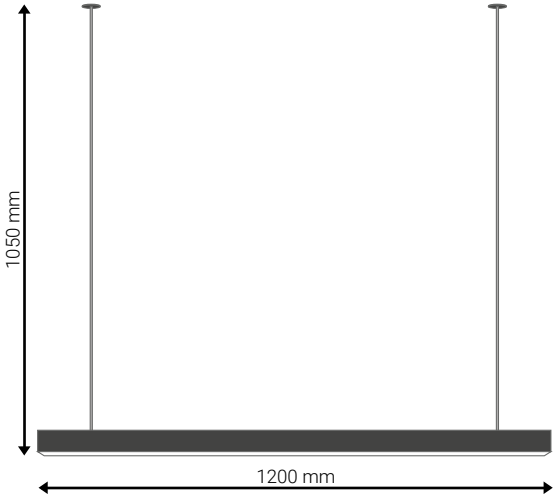

Included:
- LED lamp
- 2x 1m mounting cables
- 2x surface mounting brackets

Index					EAN CODE
0586	40W	3200lm	1200 x 50 x 50 mm Length of mounting cables: 1 [m]	Black	5 904703 001584 >



SMD 2835	220-240V AC 50/60HZ	Steel + wood	Black + wood	4000K	110°	IP20

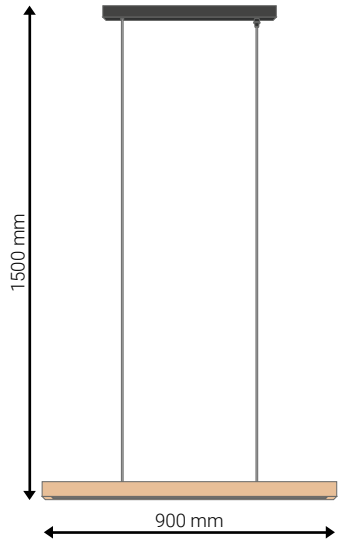

Presto LED

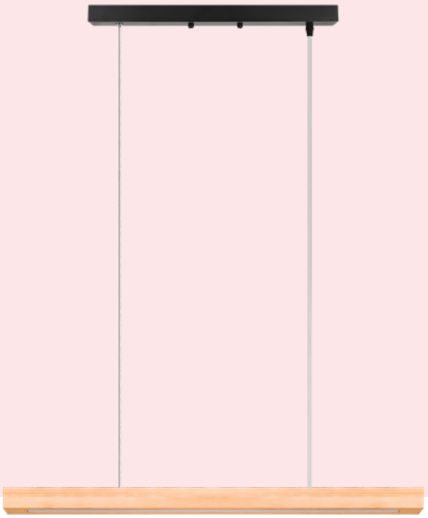

Index				EAN CODE
9517	24W	2150lm	900 x 50 x 1500 mm	5 904703 020110 >

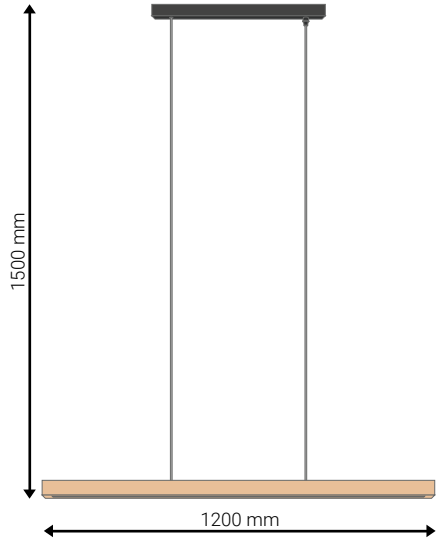

Presto LED

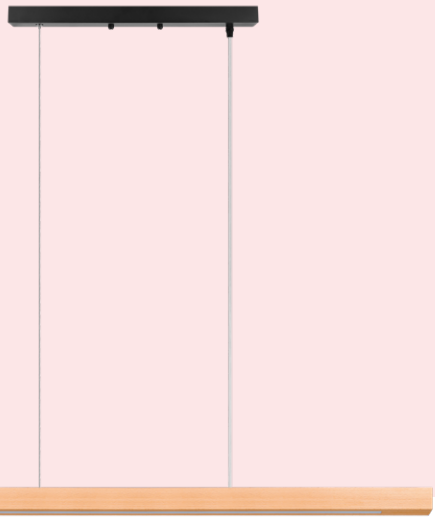

Index				EAN CODE
9516	30W	2700lm	1200 x 50 x 1500 mm	5 904703 020103 >

Lampy wiszące
LED pendant light
Hängelampen
Függő lámpák

SMD 2835	200-240V AC 50/60HZ	Steel + aluminium + PC	4000K	IP20

Kiki LED

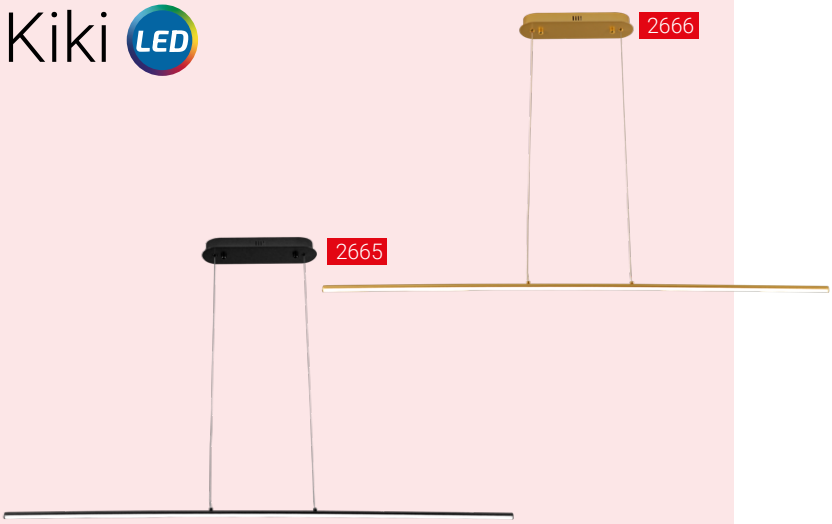

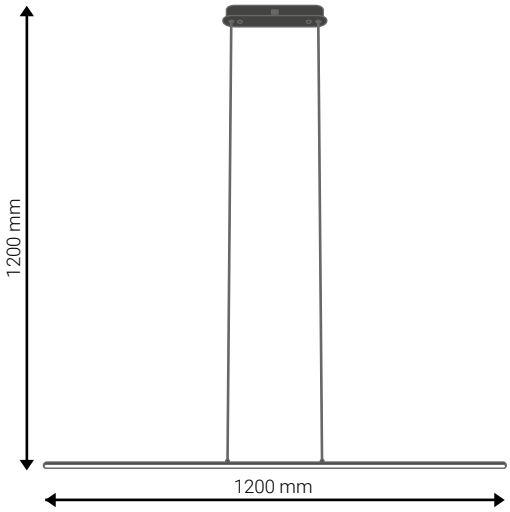

Index						EAN CODE
2666	20W	1800lm	160°	1200 x 80 x 1200 mm	Gold	5 904703 011439 >
2665					Black	5 904703 011422 >

Kono LED

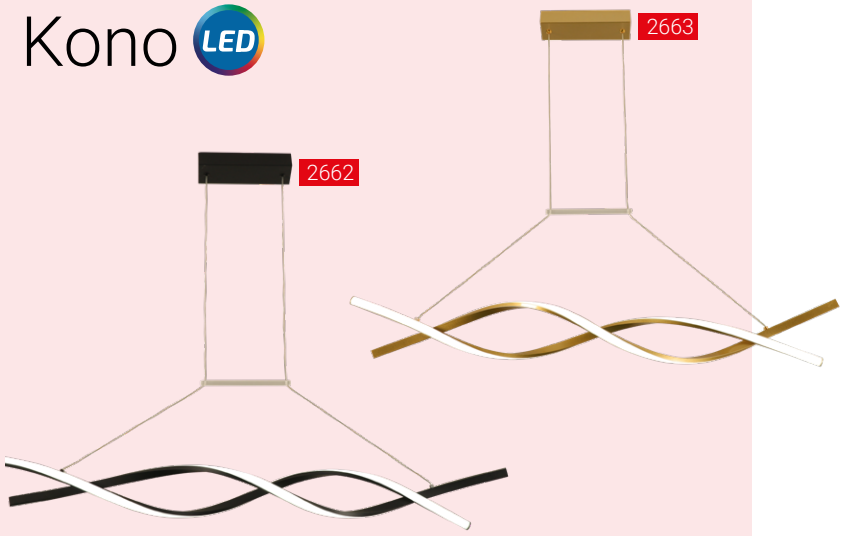

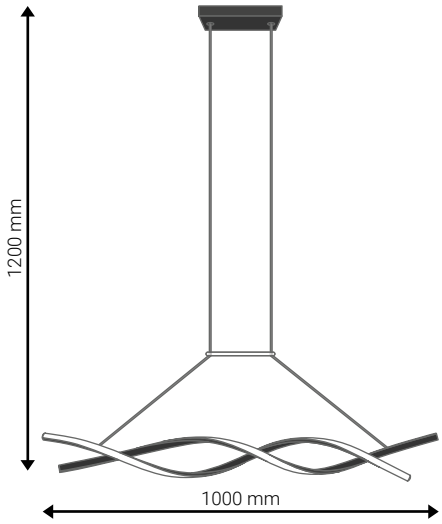

Index						EAN CODE
2663	33W	2150lm	360°	1000 x 125 x 1200 mm	Gold	5 904703 011415 >
2662					Black	5 904703 011408 >

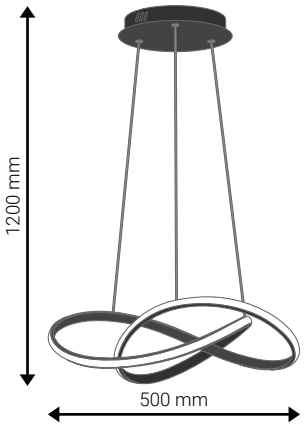

Tavi LED

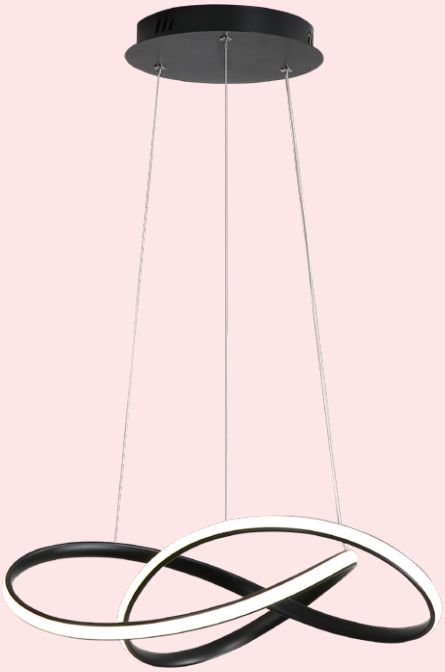

Index										EAN CODE
2661	SMD 2835	200-240V AC 50/60HZ	Steel + aluminium + PC	30W	2300lm	Ø500 x 1200 mm	4000K	IP20	Black	5 904703 011392 >



Mesto LED



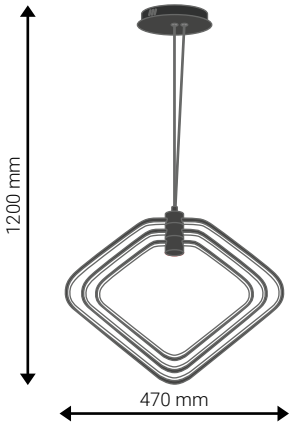

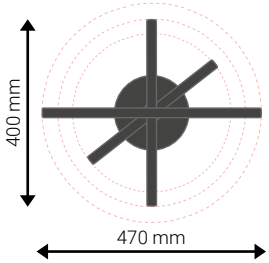

adjustable lamp elements system

Index										EAN CODE
2660	SMD 2835	200-240V AC 50/60HZ	Steel + aluminium + PC	39W	4200lm	470 x 400 x 1200 mm	4000K	IP20	Black	5 904703 011385 >



220-240V AC 50/60HZ	Aluminium + steel	IP20	Ø54 x 290 mm



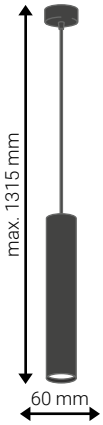

Keon LED GU10



Index				EAN CODE
0139	1x GU10 (max. 35W)*	Ø60 x 1315 mm	Black + gold	5 904703 010357 >
3762			Black	5 904703 010333 >

*not included



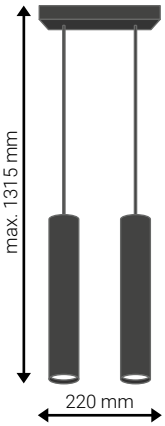

Keon LED GU10



Index				EAN CODE
0151	2x GU10 (max. 2x 35W)*	220 x 54 x 1315 mm	Black + gold	5 904703 010463 >
0149			Black	5 904703 010456 >

*not included

Lampy wiszące
LED pendant light
Hängelampen
Függő lámpák

220-240V AC 50/60HZ	Aluminium + steel	IP20	Ø54 x 290 mm

Keon LED GU10

1009



0152

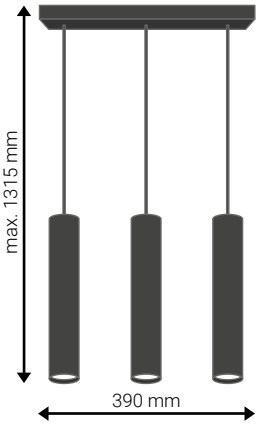



Index				EAN CODE
1009	3x GU10 (max. 3x 35W)*	390 x 54 x 1315 mm	Black + gold	5 904703 010487 >
0152			Black	5 904703 010470 >

*not included

Keon LED GU10

2827



1205

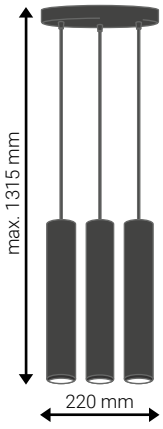



Index				EAN CODE
2827	3x GU10 (max. 3x 35W)*	Ø220 x 1315 mm	Black + gold	5 904703 010500 >
1205			Black	5 904703 010494 >

*not included

220-240V AC 50/60HZ	Aluminium + steel	IP20	Ø54 x 290 mm



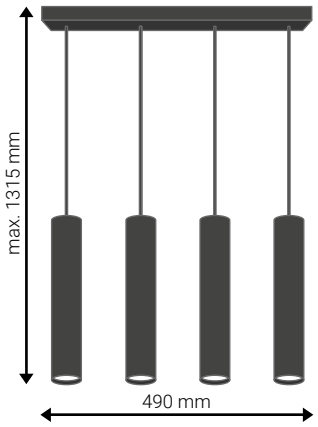

Keon

LED GU10

1269



Index				EAN CODE
1269	4x GU10 (max. 4x 35W)*	490 x 54 x 1315 mm	Black + gold	5 904703 010531 >
1256			Black	5 904703 010524 >

*not included



Glamour



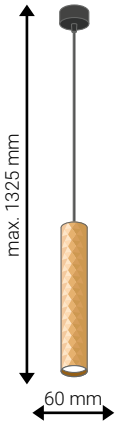



Index								EAN CODE
0469	200-240V AC 50/60HZ	1x GU10 (max. 35W)* *not included	Aluminium	Ø60 x 1325 mm	Ø54 x 290 mm	IP20	Gold	5 904703 010968 >



220-240V AC 50/60HZ	Aluminium + steel	IP20	Ø25 x 500 mm



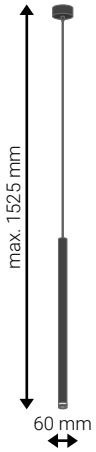

Piero LED G9

1279 1284

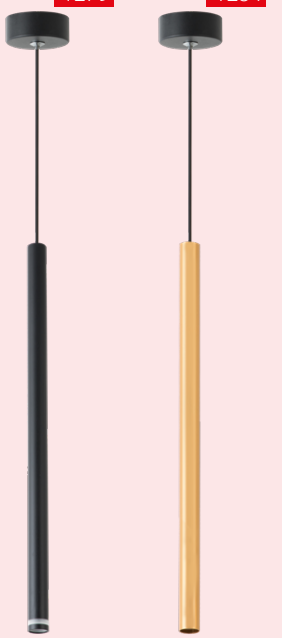

Index				EAN CODE
1284	1x G9 (max. 35W)*	Ø60 x 1525 mm	Black + gold	5 904703 010579 >
1279			Black + acrylic	5 904703 010555 >

*not included



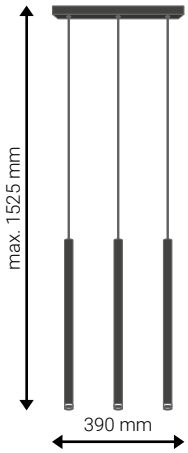

Piero LED G9

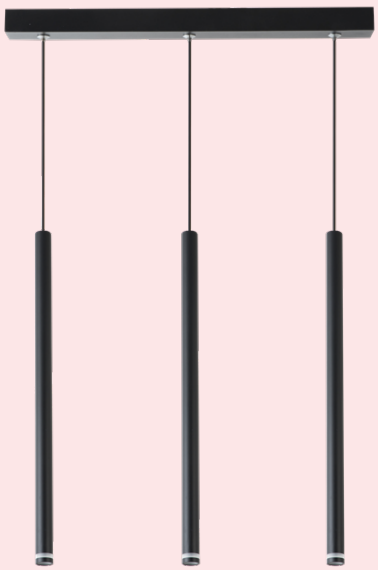

Index				EAN CODE
1285	2x G9 (max. 2x 35W)*	390 x 40 x 1525 mm	Black + acrylic	5 904703 010890 >

*not included

Lampy wiszące
LED pendant light
Hängelampen
Függő lámpák

220-240V AC 50/60HZ	Aluminium + steel	IP20	Ø54 x 290 mm

Piero LED G9

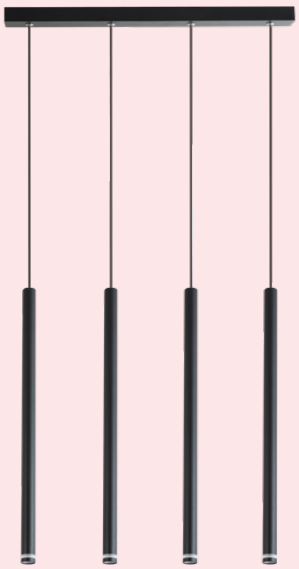

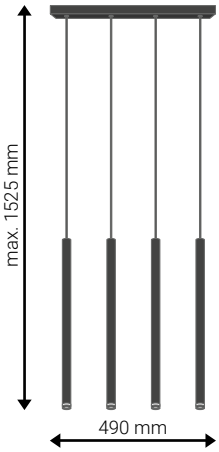



Index				EAN CODE
1289	3x G9 (max. 3x 35W)*	490 x 40 x 1525 mm	Black + acrylic	5 904703 010906 >

*not included

Piero LED G9



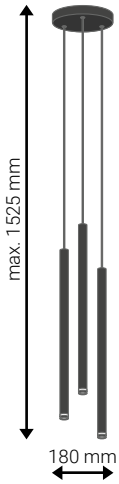



Index				EAN CODE
1332	3x G9 (max. 3x 35W)*	Ø180 x 1525 mm	Black + gold	5 904703 010609 >
1294			Black + acrylic	5 904703 010593 >

*not included

220-240V AC 50/60HZ	Aluminium + steel	IP20	Ø25 x 500 mm



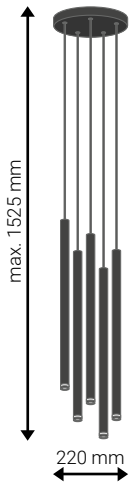

Piero LED G9



Index				EAN CODE
1302	5x G9 (max. 5x 35W)* *not included	Ø220 x 1525 mm	Black + acrylic	5 904703 010913 >



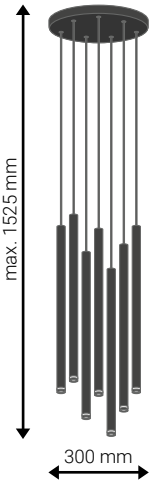

Piero LED G9

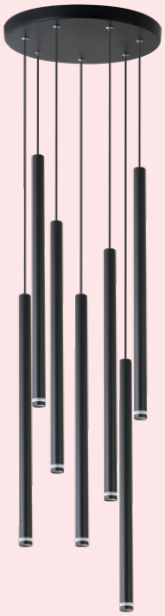

Index				EAN CODE
1364	7x G9 (max. 7x 35W)* *not included	Ø300 x 1525 mm	Black + acrylic	5 904703 010920 >

Kilio

LED E27



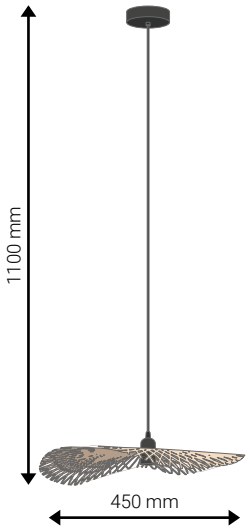



Index							EAN CODE
9807	230V AC 50/60HZ	1x E27 (max. 40W)*	Steel + bamboo	Ø450 x 1100 mm	Black + bamboo	IP20	5 904703 022954 >



230V AC 50/60HZ	1x E27 (max. 40W)*	Steel + bamboo	Black + bamboo	IP20

*not included



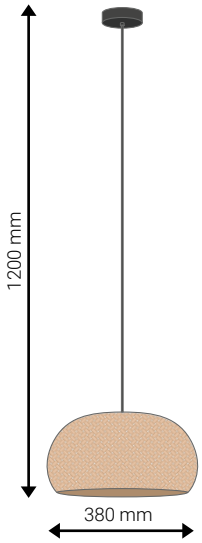

Denis LED E27



Index		EAN CODE
9806	Ø380 x 1200 mm	5 904703 022923 >



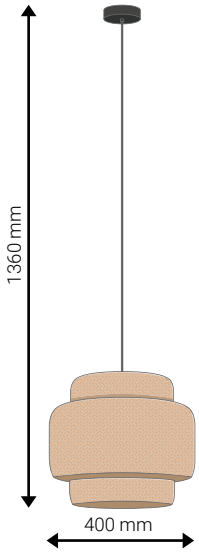

Poli LED E27



Index		EAN CODE
9811	Ø400 x 1360 mm	5 904703 023029 >

Oprawy wiszące
Pendant light
Hängeleuchten
Függő kötés

230V AC 50/60HZ	1x E27 (max. 40W)*	Steel + paper cordfabric	Brown + black	IP20

*not included

Tutti LED E27







Index		EAN CODE
9812	Ø400 x 1250 mm	5 904703 023036 >

Korn LED E27



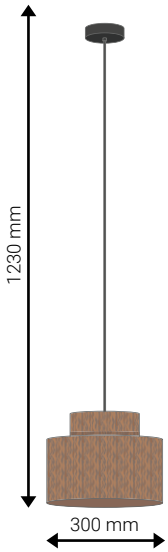



Index		EAN CODE
9808	Ø300 x 1230 mm	5 904703 022985 >

100-240V AC 50/60HZ	1x E27 (max. 35W)* *not included	Steel + glass	IP20	Ø150 x 150 mm



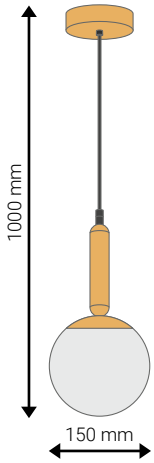

Bali LED E27



Index			EAN CODE
9781	Ø150 x 1000 mm	Gold	5 904703 022831 >



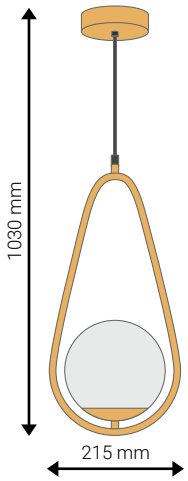

Bali LED E27



Index			EAN CODE
9783	215 x 150 x 1030 mm	Gold	5 904703 022855 >

Oprawy wiszące
Pendant light
Hängeleuchten
Függő kötés

100-240V AC 50/60HZ	1x E27 (max. 35W)*	IP20	Ø150 x 150 mm

*not included

Bali LED E27



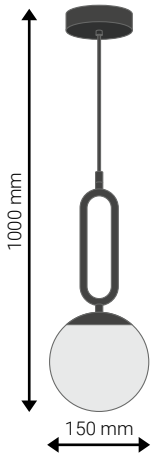



Index				EAN CODE
9788	Steel + glass	Ø150 x 1000 mm	Gold	5 904703 022909 >
9787			Black	5 904703 022893 >

Glass lampshade for pendant lights of the Bali series







Index					EAN CODE
9777	1x E27*	Milky glass	Ø150 x 150 mm	White	5 904703 022602 >
9100			Ø120 x 105 mm		5 904703 018339 >
9767	1x G9*		Ø100 x 100 mm		5 904703 022565 >

*not included

100-240V AC 50/60HZ	Steel + glass	IP20	Ø120 x 105 mm



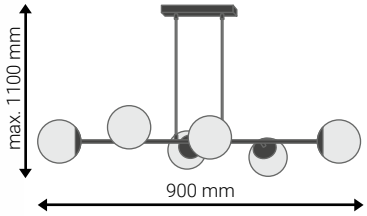

Bali LED E27

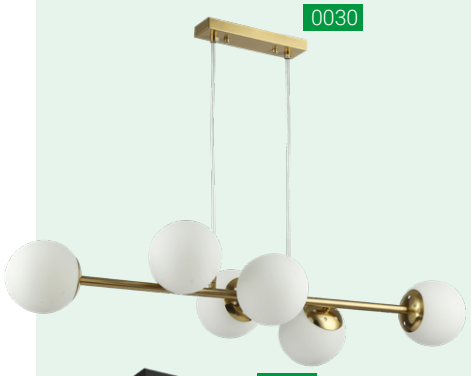



Index				EAN CODE
0030	6x E27 (max. 35W)* *not included	900 x 260 x 1100 mm	Gold	5 904703 015314 >
0029			Black	5 904703 015307 >



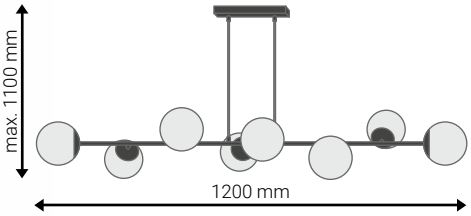

Bali LED E27





Index				EAN CODE
0032	8x E27 (max. 35W)*	1200 x 260 x 1100 mm	Gold	5 904703 015338 >
0031			Black	5 904703 015321 >

Oprawy wiszące
Pendant light
Hängeleuchten
Függő kötés

85-265V AC 50/60HZ	IP20	Ø120 x 80 mm

Stark

LED E27







Index					EAN CODE
9203	1x E27 (max. 50W)* *not included	Ø120 x 1100 mm	Steel + glass	Black	5 904703 018452 >

Stark

LED E27

9205



9206



Wood

oak wood beam

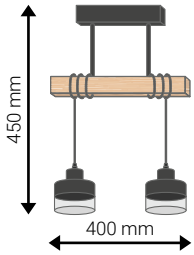

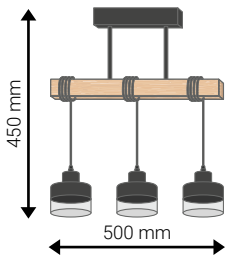



Index					EAN CODE
9205	2x E27 (max. 50W)*	400 x 120 x 450 mm	Steel + glass + wood	Black + wooden	5 904703 018469 >
9206	3x E27 (max. 50W)* *not included	500 x 120 x 450 mm			5 904703 018476 >

100-240V AC 50/60HZ	Steel	IP20	Ø140 x 140 mm



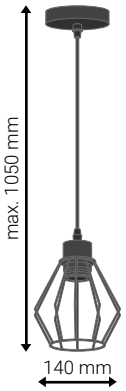

Otto LED E27



Index				EAN CODE
2494	1x E27 (max. 35W)*	Ø140 x 1050 mm	White	5 904703 000020 >
2493			Black	5 904703 010074 >

*not included



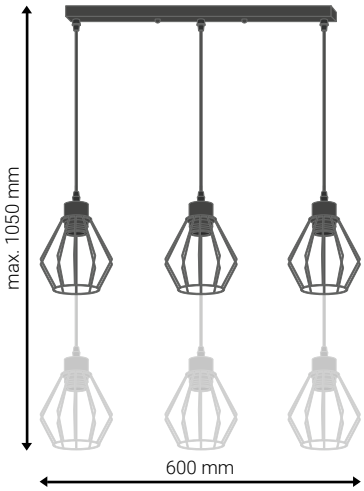

Otto LED E27



Index				EAN CODE
2492	3x E27 (max. 35W)*	600 x 140 x 1050 mm	Black	5 904703 010562 >

*not included

Oprawy wiszące
Pendant light
Hängeleuchten
Függő kötés

110-240V AC 50/60HZ	3x E27 (max. 35W)* *not included	IP20	Ø140 x 140 mm

Otto

LED E27



Wood

oak wood beam
with 130cm cable

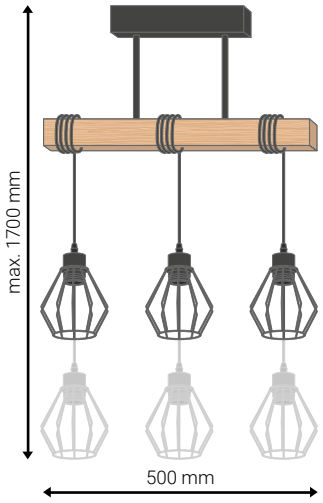



Index				EAN CODE
3775	Steel + wood	500 x 140 x 1700 mm	Black + wooden	5 904703 010982 >

Otto

LED E27

0752



2491

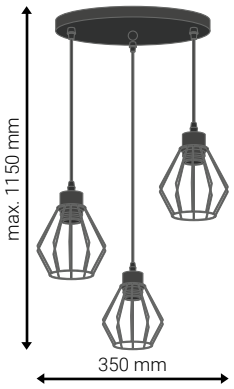



Index				EAN CODE
0752	Steel	Ø350 x 1150 mm	White + gold	5 904703 010302 >
2491			Black	5 904703 010296 >

LVT lvt.com.pl VIP ELECTRO.PL master LED XUDO

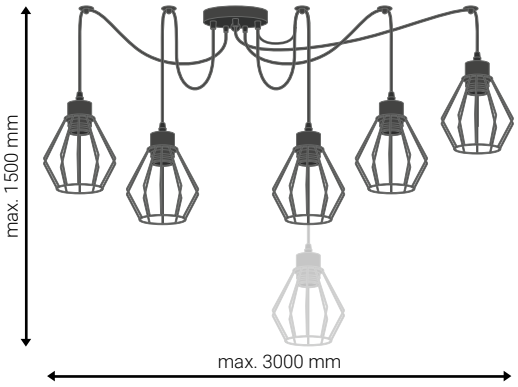

Otto

LED E27



Index								EAN CODE
3963	5x E27 (max. 35W)* *not included	110-240V AC 50/60HZ	Steel	3000 x 3000 x 1500 mm	IP20	Ø140 x 140 mm	Black	5 904703 010166 >



Nido

LED E27



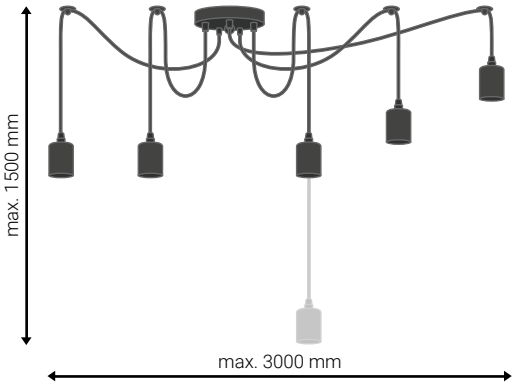

Index							EAN CODE
6055	3x E27 (max. 35W)* *not included	110-240V AC 50/60HZ	Steel	3000 x 3000 x 1500 mm	Black	IP20	5 904703 010623 >



110-240V AC 50/60HZ	Steel + wood	Black + wood	IP20



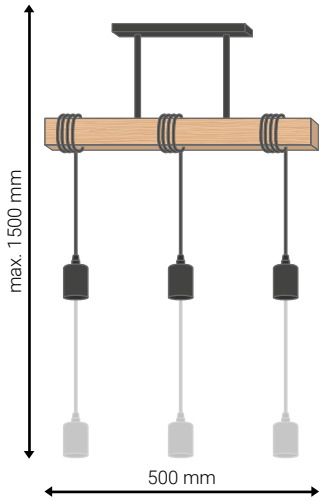

Nido LED E27



Wood
oak wood beam

Index			EAN CODE
4200	3x E27 (max. 35W)* *not included	500 x 120 x 1500 mm	5 903002 038475 >



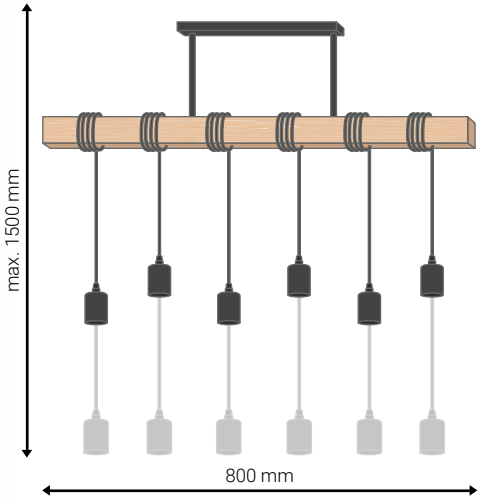

Nido LED E27

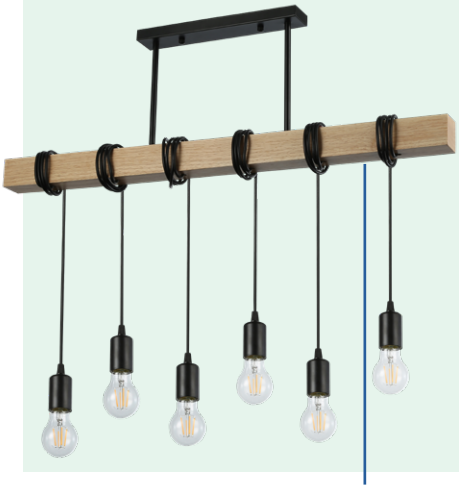

Wood
oak wood beam

Index			EAN CODE
3964	6x E27 (max. 35W)* *not included	800 x 120 x 1500 mm	5 904703 010234 >

Oprawy wiszące
Pendant light
Hängeleuchten
Függő kötés

110-240V AC 50/60HZ	Steel	IP20	Ø90 x 100 mm

Elen LED E27

0321

0245



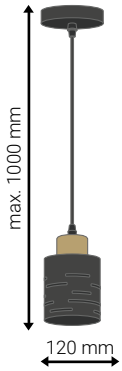



Index				EAN CODE
0321	1x E27 (max. 35W)* *not included	Ø100 x 1000 mm	White + gold	5 904703 023180 >
0245			Black+ gold	5 904703 023197 >

Elen LED E27

0325

0323



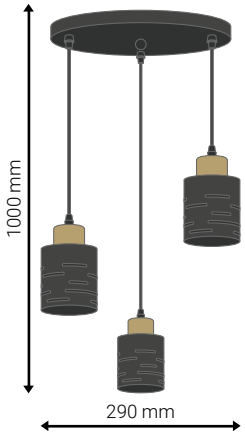



Index				EAN CODE
0325	3x E27 (max. 35W)* *not included	Ø290 x 1000 mm	White + gold	5 904703 023166 >
0323			Black+ gold	5 904703 023173 >

110-240V AC 50/60HZ	Steel + wood	IP20	Ø90 x 100 mm



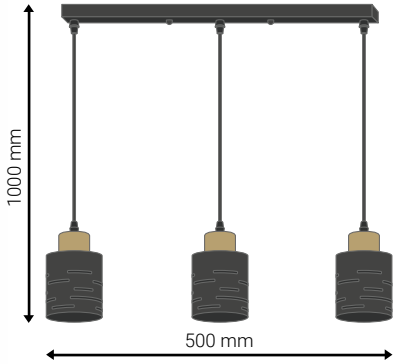

Elen LED E27





Index				EAN CODE
0461	3x E27 (max. 35W)* *not included	500 x 90 x 1000 mm	White + gold	5 904703 023319 >
0425			Black + gold	5 904703 023302 >



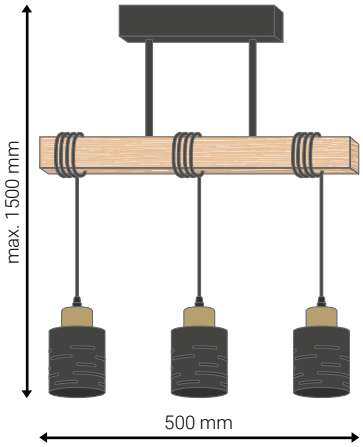

Elen LED E27





Index				EAN CODE
0496	3x E27 (max. 35W)* *not included	500 x 90 x 1500 mm	White + wood	5 904703 023333 >
0465			Black + wood	5 904703 023326 >

Oprawy wiszące
Pendant light
Hängeleuchten
Függő kötés

110-240V AC 50/60HZ	Steel	IP20	Ø120 x 80 mm

Elza LED E27



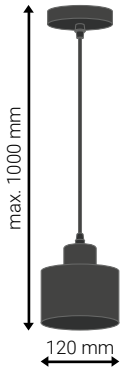



Index				EAN CODE
2497	1x E27 (max. 35W)*	Ø120 x 1000 mm	White + gold	5 904703 010050 >
4746	*not included		Black	5 904703 000730 >



110-240V AC 50/60HZ	Steel	IP20	Ø120 x 80 mm



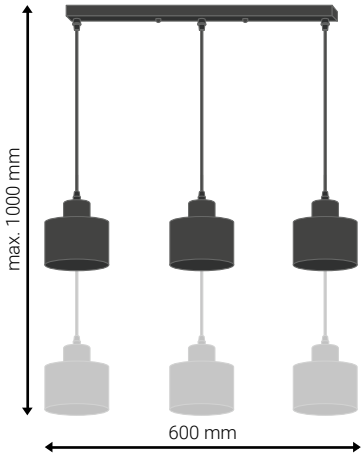

Elza LED E27



Index				EAN CODE
2496	3x E27 (max. 35W)* *not included	600 x 120 x 1000 mm	White + gold	5 904703 010326 >
2495			Black	5 904703 010319 >



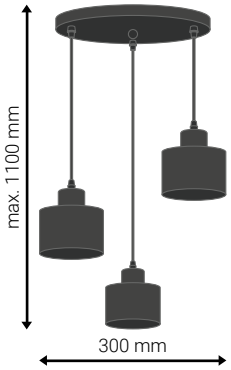

Elza LED E27



Index				EAN CODE
2490	3x E27 (max. 35W)* *not included	Ø300 x 1100 mm	White + gold	5 904703 010203 >
2489			Black + copper	5 904703 010142 >
2483			Black	5 904703 010128 >

Oprawy wiszące
Pendant light
Hängeleuchten
Függő kötés

85-265V AC 50/60HZ	Steel + wood	Black + wood	IP20	Ø120 x 80 mm

Elza

LED E27

9212

4195



Wood

oak wood beam

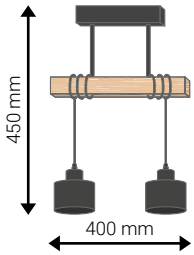

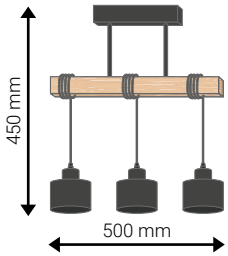



Index			EAN CODE
9212	2x E27 (max. 50W)*	400 x 120 x 450 mm	5 904703 018469 >
4195	3x E27 (max. 50W)*	500 x 120 x 450 mm	5 904703 018476 >

*not included



LVT lvt.com.pl VIP ELECTRO.PL master LED XUDO

220-240V AC 50/60HZ	Steel + aluminium	IP20	Ø120 x 250 mm



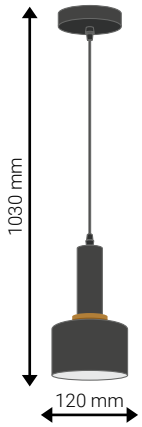

Tema



Index				EAN CODE
0104	1x E27 (max. 60W)*	Ø120 x 1030 mm	White + copper	5 904703 016427 >
0118			Black + white + copper	5 904703 016519 >

*not included



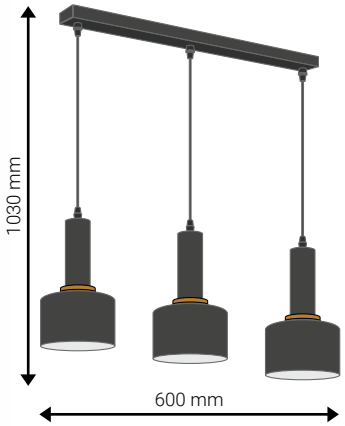

Tema



Index				EAN CODE
0113	3x E27 (max. 3x 60W)*	600 x 120 x 1030 mm	White + copper	5 904703 016472 >
0119			Black + white + copper	5 904703 016526 >

*not included

Oprawy wiszące
Pendant light
Hängeleuchten
Függő kötés

110-240V AC 50/60HZ	Steel	IP20	Ø170 x 200 mm

Como LED E27



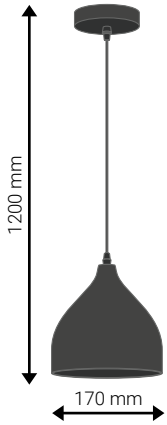



Index				EAN CODE
0102	1x E27 (max. 60W)*	Ø170 x 1200 mm	White	5 904703 016410 >
0110			Black	5 904703 016458 >

*not included

Como LED E27



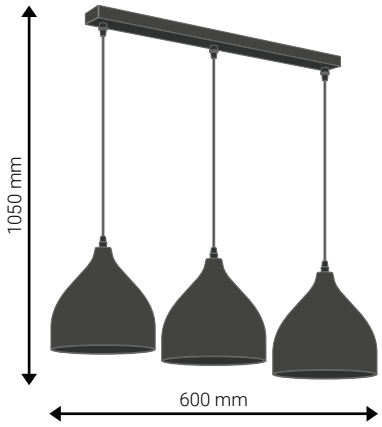



Index				EAN CODE
0085	3x E27 (max. 60W)*	600 x 170 x 1200 mm	White	5 904703 016328 >
0116			Black	5 904703 016502 >

*not included

100-240V AC 50/60HZ	Aluminium	IP20



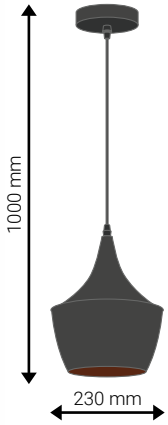

Karo LED E27



Index				EAN CODE
0027	1x E27 (max. 35W)* *not included	Ø230 x 1000 mm	Black + gold	5 904703 015284 >



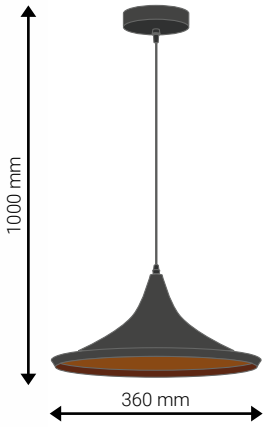

Mezo LED E27



Index				EAN CODE
0026	1x E27 (max. 35W)* *not included	Ø360 x 1000 mm	Black + gold	5 904703 015277 >

110-240V AC 50/60HZ	Steel	IP20

Cube LED E27



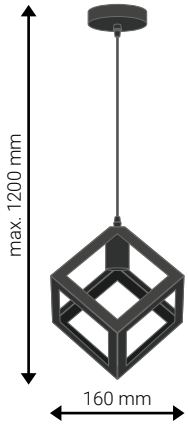



Index				EAN CODE
4202	1x E27 (max. 35W)* *not included	Ø160 x 1200 mm	Black	5 904703 016328 >

Felia LED E27



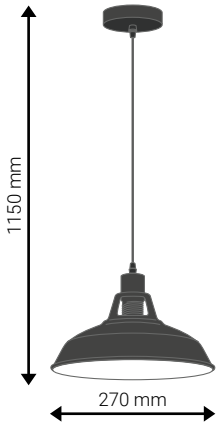



Index				EAN CODE
0087	1x E27 (max. 60W)* *not included	Ø270 x 1150 mm	Black + white	5 904703 016335 >

110-240V AC 50/60HZ	Aluminium	IP20



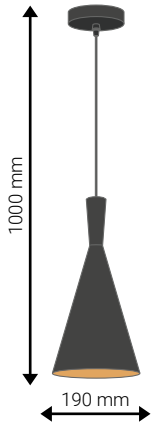

Pinio LED E27



Index				EAN CODE
0028	1x E27 (max. 35W)* *not included	Ø190 x 1000 mm	Black + gold	5 904703 015291 >



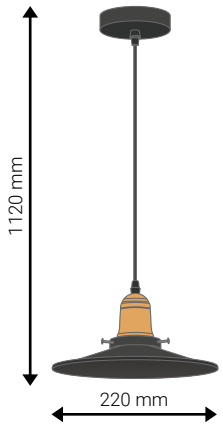

Loft LED E27



Index				EAN CODE
0096	1x E27 (max. 60W)* *not included	Ø220 x 1120 mm	Black + gold	5 904703 016373 >

Oprawy wiszące
Pendant light
Hängeleuchten
Függő kötés

110-240V AC 50/60HZ	1x E27 (max. 60W)*	Steel + aluminium	IP20

*not included

Olena LED E27

0084

0101

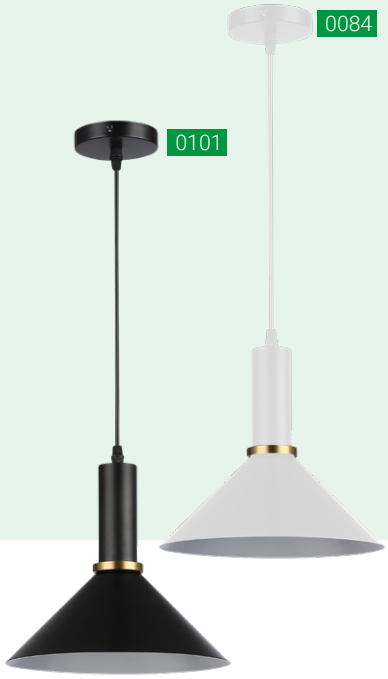

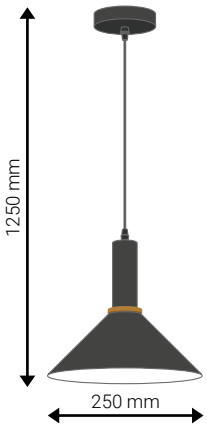



Index			EAN CODE
0084	Ø250 x 1250 mm	White + copper	5 904703 016311 >
0101		Black + white + copper	5 904703 016403 >

Koko LED E27

0092

0112



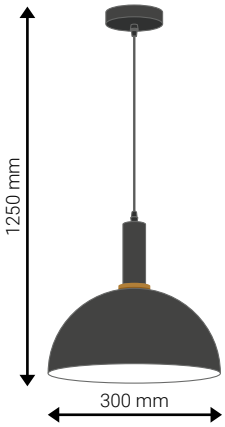



Index			EAN CODE
0092	Ø300 x 1250 mm	White + copper	5 904703 016342 >
0112		Black + white + copper	5 904703 016465 >

110-240V AC 50/60HZ	Steel	IP20



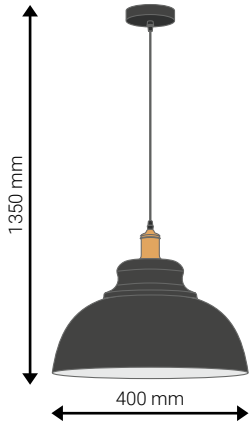

Flara LED E27

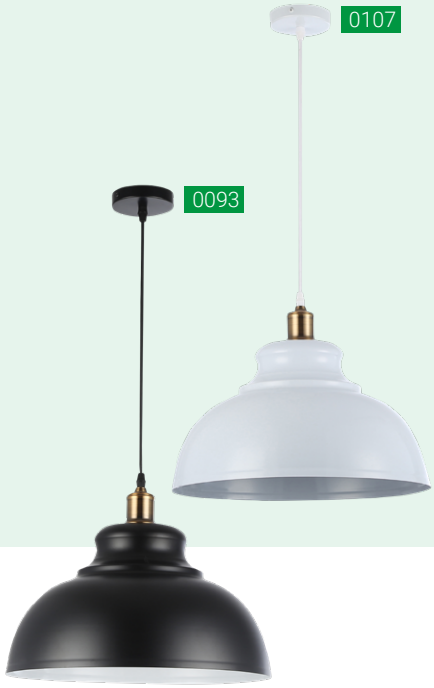

Index				EAN CODE
0107	1x E27 (max. 60W)*	Ø400 x 1350 mm	White + copper	5 904703 016434 >
0093			Black + white + copper	5 904703 016359 >

*not included



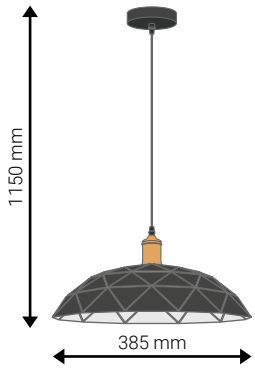

Dalia LED E27

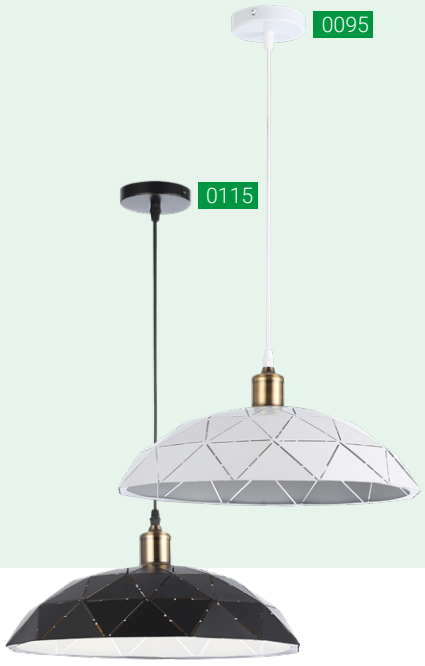

Index				EAN CODE
0095	1x E27 (max. 60W)*	Ø385 x 1150 mm	White + copper	5 904703 016366 >
0115			Black + copper + white	5 904703 016496 >

Oprawy wiszące
Pendant light
Hängeleuchten
Függő kötés

110-240V AC 50/60HZ	1x E27 (max. 60W)*	Steel	IP20

*not included

Tao LED E27



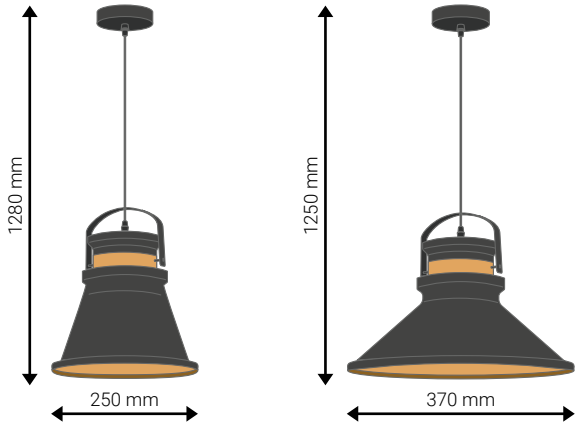

Index			EAN CODE
0100	Ø250 x 1280 mm	Black + copper + gold	5 904703 016564 >
0099	Ø370 x 1250 mm		5 904703 016397 >



100-240V AC 50/60HZ	Steel + wood	Black + wood	IP20	Ø180 x 260 mm



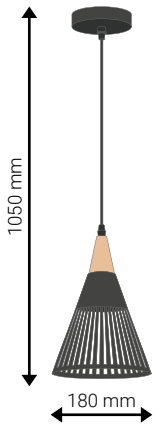

Hira LED E27

0025 0023



Index			EAN CODE
0023	1x E27 (max. 35W)*	Ø180 x 1050 mm	5 904703 015246 >
0025	3x E27 (max. 35W)*	Ø300 x 1050 mm	5 904703 015260 >

*not included





Hira LED E27



Index			EAN CODE
0024	3x E27 (max. 35W)*	600 x 180 x 1050 mm	5 904703 015253 >

*not included

100-240V AC 50/60HZ	IP20

Miko LED E27



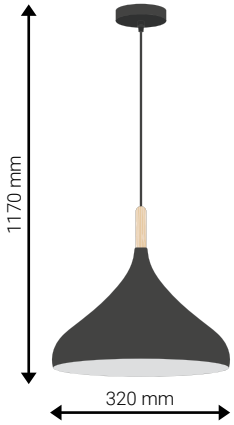



Index					EAN CODE
0022	1x E27 (max. 35W)* *not included	Steel + wood	Ø320 x 1170 mm	White + wood	5 904703 015222 >
0021				Black + wood	5 904703 015239 >

Lumina LED E27

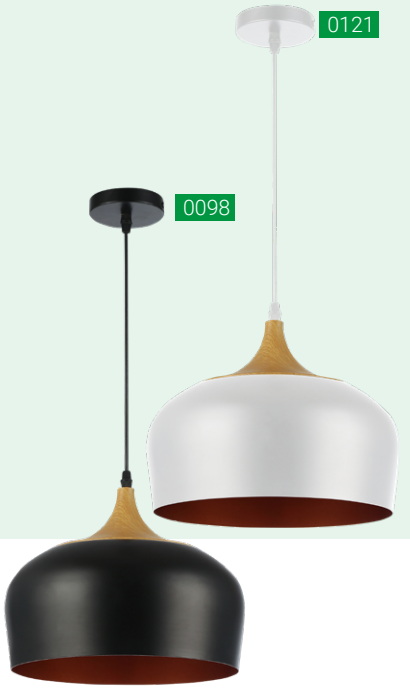

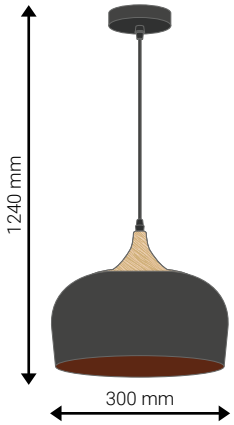



Index					EAN CODE
0121	1x E27 (max. 60W)* *not included	Steel + steel painted	Ø300 x 1240 mm	White + wood pattern + gold	5 904703 016533 >
0098				Black + wood pattern + gold	5 904703 016380 >

SMD 2835	185-240V AC 50/60HZ	Aluminium + PC	4000K	120°	IP20

Catrina LED



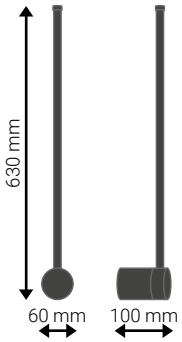



Index					EAN CODE
1210	9W	670lm	60 x 100 x 630 mm	Black	5 904703 008989 >

Catrina LED

8716 1271

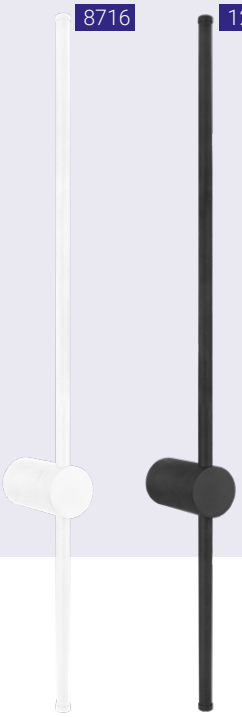

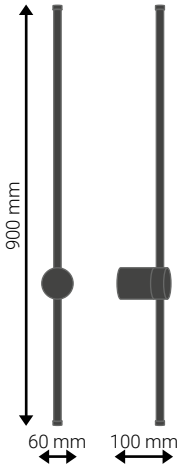



Index					EAN CODE
8716	14W	820lm	60 x 100 x 900 mm	White	5 904703 014775 >
1271				Black	5 904703 008972 >



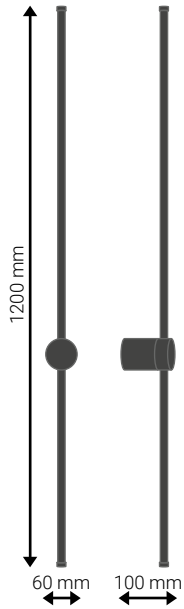

Catrina



Index										EAN CODE
1272	SMD 2835	185-240V AC 50/60HZ	17W	1200lm	4000K	Aluminium + PC	IP20	60 x 100 x 1200 mm	Black	5 904703 008965 >



SMD	200-240V AC 50/60HZ	Aluminium	4000K	Black + gold	120°	IP20

Como LED

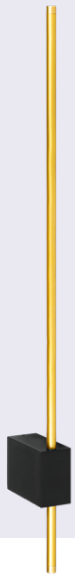

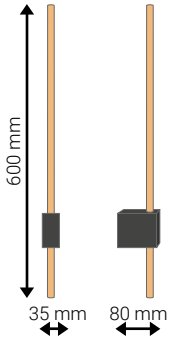



Index				EAN CODE
9498	6W	600lm	35 x 80 x 600 mm	5 904703 022084 >

Como LED



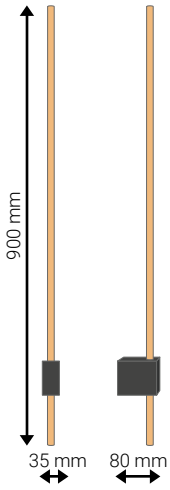



Index				EAN CODE
9499	9W	900lm	35 x 80 x 900 mm	5 904703 022091 >

SMD	200-240V AC 50/60HZ	Aluminium	4000K	Black + gold	120°	IP20



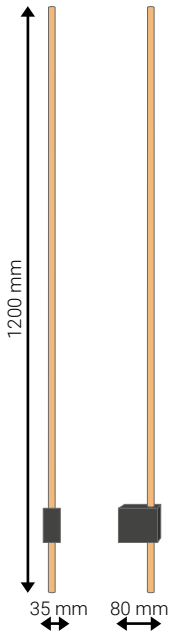

Como LED

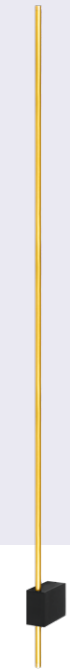

Index				EAN CODE
9500	12W	1200lm	35 x 80 x 1200 mm	5 904703 022107 >



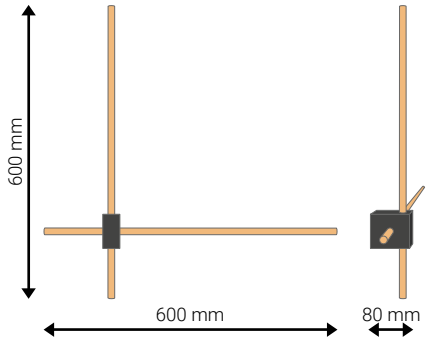

Como LED

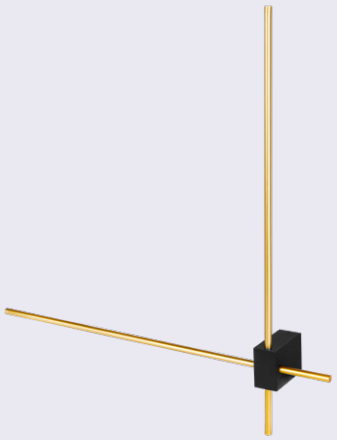

Index				EAN CODE
9497	12W	1200lm	600 x 80 x 600 mm	5 904703 022077 >

SMD 2835	220-240V AC 50/60HZ	Steel + aluminium + PVC	4000K	Black	120°	IP20

Lira LED



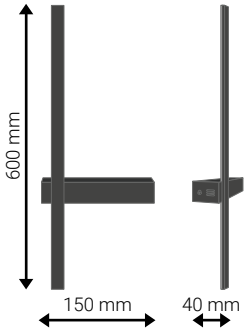



Index				EAN CODE
9522	8W	840lm	150 x 40 x 600 mm	5 904703 020318 >

Lira LED



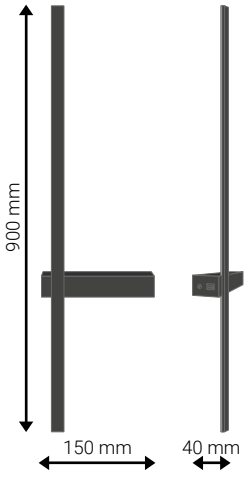



Index				EAN CODE
9524	12W	1400lm	150 x 40 x 900 mm	5 904703 020325 >

Lira LED

SMD 2835	220-240V AC 50/60HZ	Steel + aluminium + PVC	4000K	Black	120°	IP20



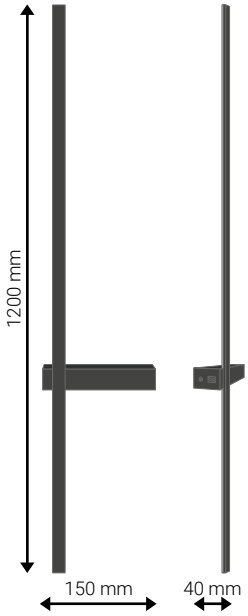



Index				EAN CODE
9525	18W	2100lm	150 x 40 x 1200 mm	5 904703 020332 >



SMD 2835	220-240V AC 50/60HZ	Steel + aluminium + PVC	4000K	Gold	120°	IP20

Goldimo LED



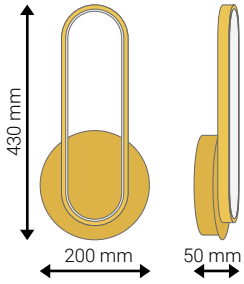



Index				EAN CODE
9537	13W	1100lm	200 x 50 x 430 mm	5 904703 020912 >

Goldimo LED

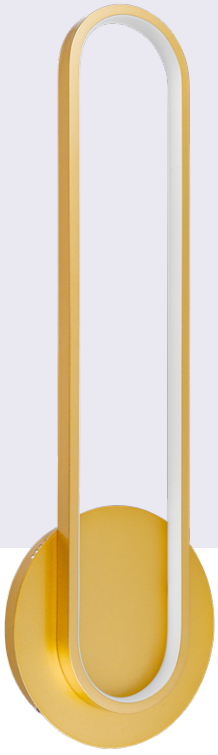

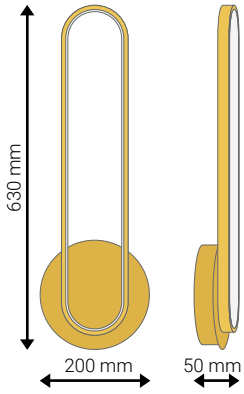



Index				EAN CODE
9538	18W	1900lm	200 x 50 x 630 mm	5 904703 020929 >

SMD 2835	220-240V AC 50/60HZ	Steel + aluminium + PVC	4000K	Gold	120°	IP20



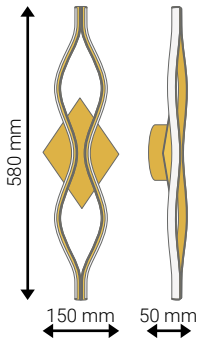

Bramis LED



Index				EAN CODE
9539	16W	2200lm	150 x 50 x 580 mm	5 904703 020936 >



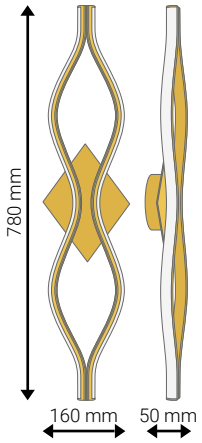

Bramis LED



Index				EAN CODE
9541	22W	3100lm	160 x 50 x 780 mm	5 904703 020943 >

Plaxio LED

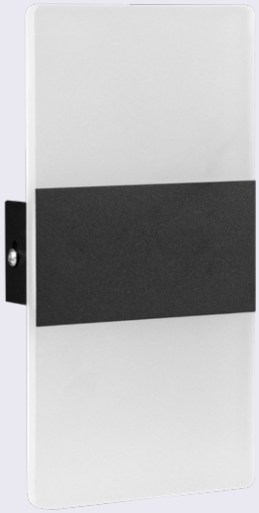

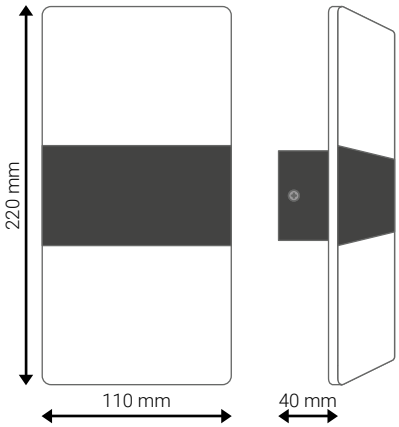



Index										EAN CODE
3631	SMD 2835	200-240V AC 50/60HZ	5W	360lm	Steel + PC	4000K	IP20	110 x 40 x 220 mm	Black	5 904703 011446 >





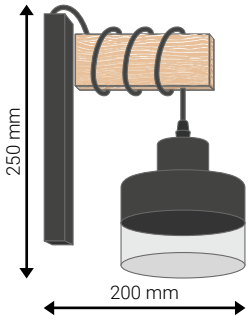



oak wood beam
with 100cm cable

Index								EAN CODE
9197	85-265V AC 50/60HZ	1x E27 (max. 50W)* *not included	Steel + wood + glass	IP20	Ø120 x 80 mm	200 x 120 x 250 mm	Black + wood	5 904703 018537 >



110-240V AC 50/60HZ	1x E27 (max. 35W)* *not included	Steel	IP20	Ø120 x 80 mm

Elza LED E27





Index			EAN CODE
4201	120 x 200 x 200 mm Cable length with plug and switch: 150cm	White + gold	5 903002 038505 >
4198		Black + copper	5 903002 038499 >
4197		Black	5 903002 038482 >

Elza LED E27



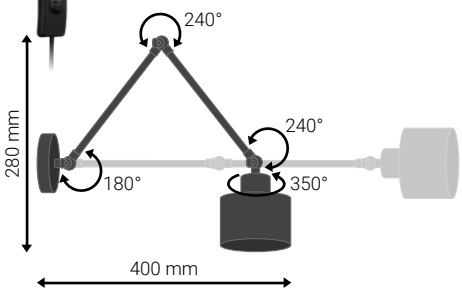



Index			EAN CODE
0122	120 x 400 x 280 mm Cable length with plug and switch: 100cm	Black + copper	5 904703 016540 >
0123		Black	5 904703 016557 >

110-240V AC 50/60HZ	1x E27 (max. 35W)*	IP20	Ø120 x 80 mm

*not included



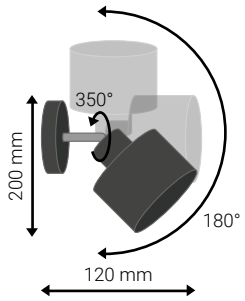

Elza LED E27



Index				EAN CODE
3766	Steel	120 x 120 x 200 mm	White + gold	5 904703 010661 >
3773			Black + copper	5 904703 010630 >
2377			Black	5 904703 010241 >



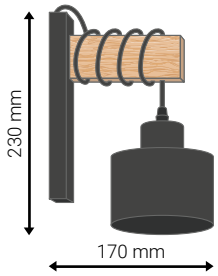

Elza LED E27



oak wood beam
with 100cm cable

Index				EAN CODE
9175	Steel + wood	120 x 170 x 230 mm	White + wood	5 904703 018346 >
0109			Black + wood	5 904703 016441 >

Kinkiety
Ceiling lamp
Wandlampen
Fali lámpák

110-240V AC 50/60HZ	Steel	IP20	Ø120 x 80 mm

Elza LED E27

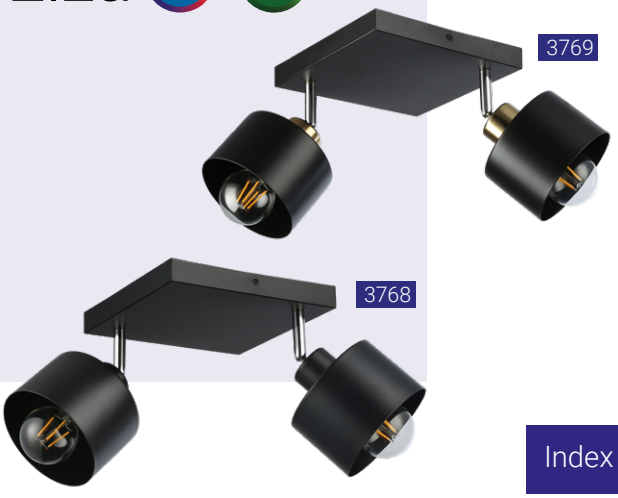

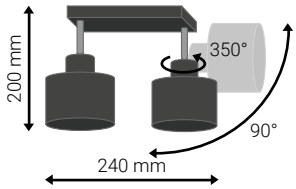



Index				EAN CODE
3769	2x E27 (max. 35W)*	240 x 240 x 200 mm	Black + copper	5 904703 010708 >
3768			Black	5 904703 010678 >

*not included

Elza LED E27



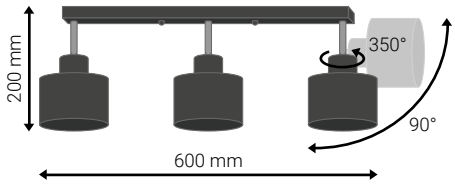



Index				EAN CODE
4216	3x E27 (max. 35W)*	600 x 120 x 200 mm	Black	5 904703 010340 >

*not included



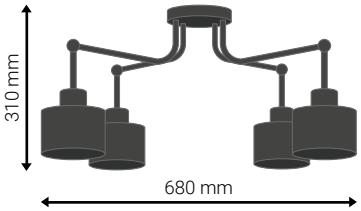

Elza

LED E27



Index							EAN CODE
2929	110-240V AC 50/60HZ	4x E27 (max. 35W)* *not included	Steel	IP20	680 x 680 x 310 mm	Black + copper	5 904703 010173 >



Kinkiety
Ceiling lamp
Wandlampen
Fali lámpák

110-240V AC 50/60HZ	3x E27 (max. 35W)* *not included	Steel	IP20	Ø120 x 80 mm

Elza LED E27

4214



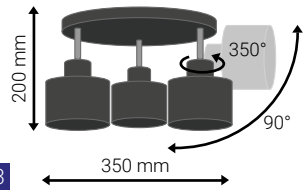

4213





3776



Index			EAN CODE
4213	Ø350 x 200 mm	White + gold	5 904703 010760 >
3776		Black + copper	5 904703 010784 >
4214		Black	5 904703 010777 >

Elza LED E27

3187



2547



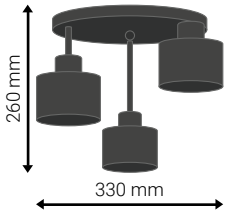



5237



Index			EAN CODE
2547	Ø330 x 260 mm	White + gold	5 904703 010821 >
5237		Black + copper	5 904703 010845 >
3187		Black	5 904703 010838 >

110-240V AC 50/60HZ	1x E27 (max. 35W)*	Steel	IP20	Ø90 x 100 mm

*not included



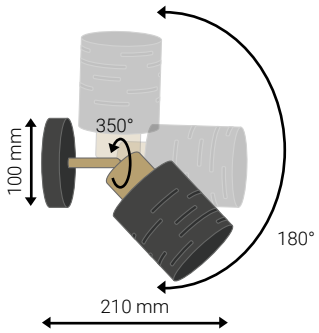



Index			EAN CODE
0183	100 x 210 x 200 mm	White + gold	5 904703 023203 >
0140		Black + gold	5 904703 023210 >



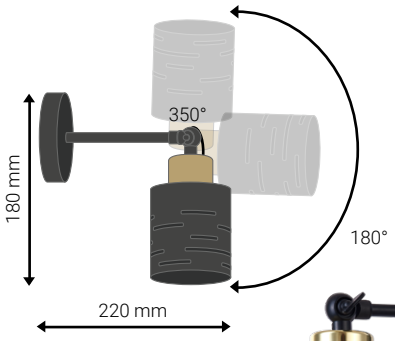



Index			EAN CODE
0502	100 x 180 x 220 mm	White + gold	5 904703 023241 >
0501	Cable length with plug and switch: 160cm	Black + gold	5 904703 023258 >

Kinkiety
Ceiling lamp
Wandlampen
Fali lámpák

110-240V AC 50/60HZ	1x E27 (max. 35W)*	Steel + wood	IP20	90 x 180 x 250 mm	Ø90 x 100 mm

*not included

Elen

LED E27



oak wood beam
with 100cm cable

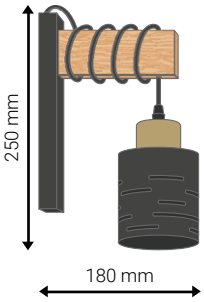



Index		EAN CODE
0547	White + gold + wood	5 904703 023227 >
0546	Black + gold + wood	5 904703 023234 >



110-240V AC 50/60HZ	1x E27 (max. 35W)*	Steel	IP20	Ø90 x 100 mm

*not included



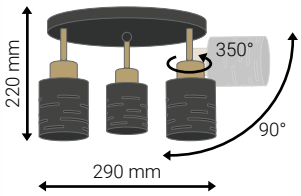

Elen LED E27

0134



0131



Index			EAN CODE
0134	Ø290 x 220 mm	White + gold	5 904703 023296 >
0131		Black + gold	5 904703 023289 >



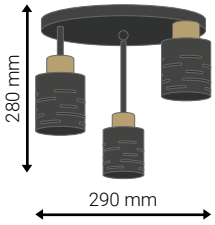

Elen LED E27

0105



0006



Index			EAN CODE
0105	Ø290 x 280 mm	White + gold	5 904703 023272 >
0006		Black + gold	5 904703 023265 >

220-240V AC 50/60HZ	Aluminium + steel	Black	IP20	Ø45 x 60 mm

Eos LED E27



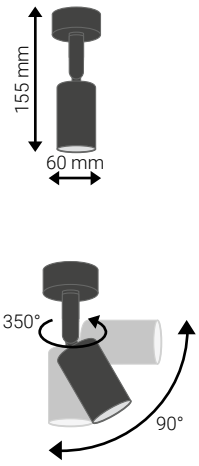



Index			EAN CODE
1671	1x E27 (max. 35W)*	Ø60x 125 mm	5 904703 002611 >

*not included

Eos LED E27



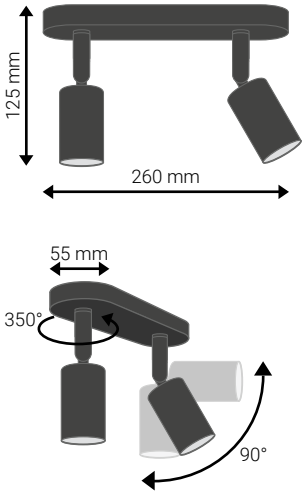



Index			EAN CODE
1672	2x E27 (max. 35W)*	260 x 55 x 125 mm	5 904703 002628 >

*not included

85-265V AC 50/60HZ	Steel + wood	Black + wood	IP20	Ø38 x 60 mm



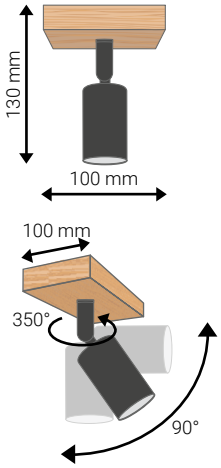

Eos LED E27



Index			EAN CODE
9199	1x E27 (max. 50W)* *not included	100 x 130 x 100 mm	5 904703 018551 >



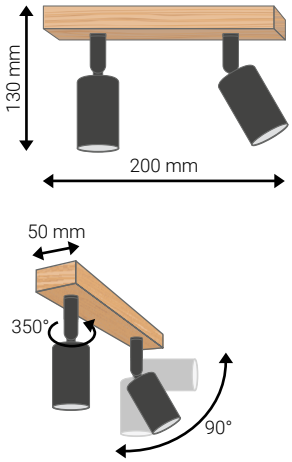

Eos LED E27



Index			EAN CODE
9198	2x E27 (max. 50W)* *not included	200 x 50 x 130 mm	5 904703 018544 >

Kinkiety
Ceiling lamp
Wandlampen
Fali lámpák

85-265V AC 50/60HZ	Steel + wood	Black + wood	IP20	Ø38 x 60 mm

Eos LED E27



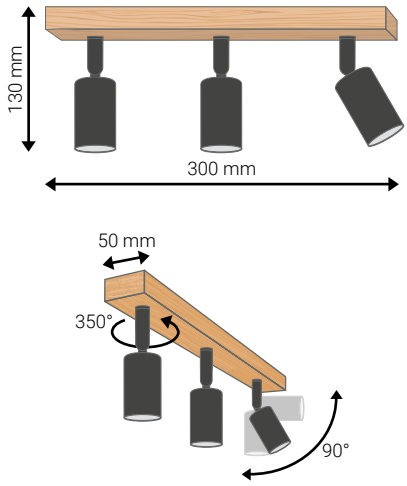



Index			EAN CODE
9200	3x GU10 (max. 50W)*	300 x 50 x 130 mm	5 904703 018568 >

*not included

Eos LED E27



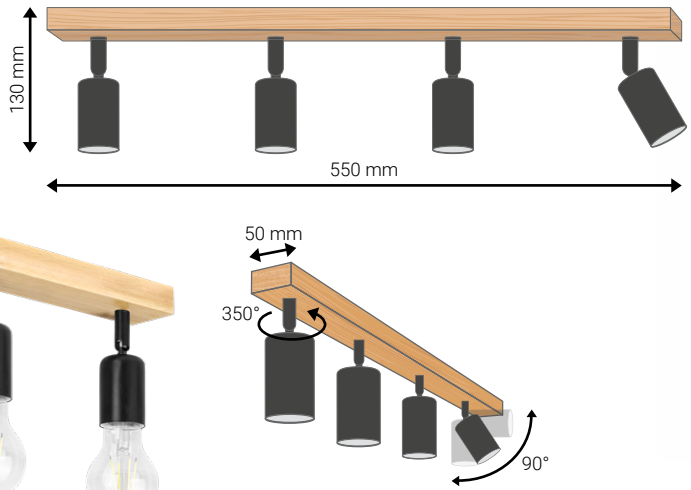



Index			EAN CODE
9201	4x GU10 (max. 50W)*	550 x 50 x 130 mm	5 904703 018575 >

*not included

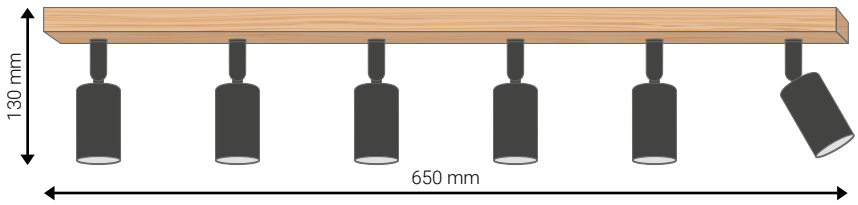

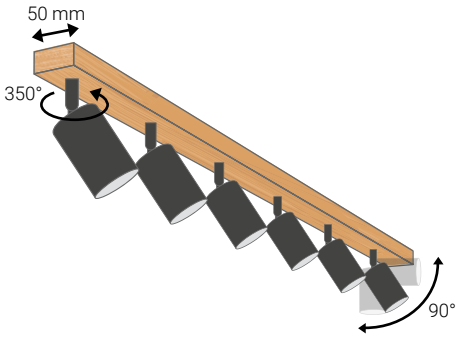

Eos LED E27



Index								EAN CODE
9202	85-265V AC 50/60HZ	6x E27 (max. 50W)* *not included	Steel + wood	IP20	650 x 50 x 130 mm	Ø38 x 60 mm	Black + wood	5 904703 018582 >



Kinkiety
Ceiling lamp
Wandlampen
Fali lámpák

85-265V AC 50/60HZ	1x E27 (max. 50W)*	Steel + wood	IP20	Ø38 x 60 mm

*not included

Eos LED E27



oak wood beam
with 100cm cable

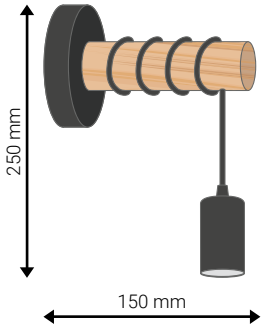



Index			EAN CODE
9193	150 x 100 x 250 mm	White + wood	5 904703 018506 >
9192		Black + wood	5 904703 018490 >

Eos LED E27



oak wood beam
with 100cm cable

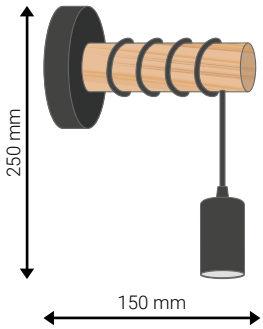



Index			EAN CODE
9195	150 x 100 x 250 mm Cable length with plug and switch: 120cm	White + wood	5 904703 018520 >
9194		Black + wood	5 904703 018513 >



110-240V AC 50/60HZ	IP20	Ø140 x 140 mm

Otto LED E27



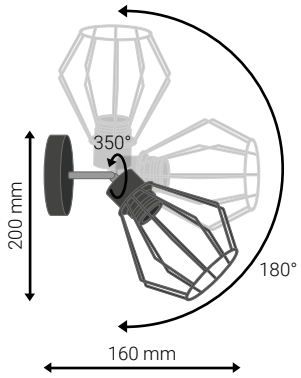



Index					EAN CODE
3767	1x E27 (max. 35W)* *not included	Steel	140 x 160 x 200 mm	Black	5 904703 010364 >

Otto LED E27



oak wood beam
with 100cm cable

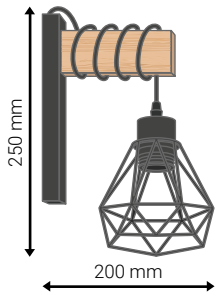



Index					EAN CODE
9196	1x E27 (max. 50W)* *not included	Steel + wood	200 x 140 x 250 mm	Black + wood	5 904703 018421 >

110-240V AC 50/60HZ	Steel	Black	IP20	Ø140 x 140 mm



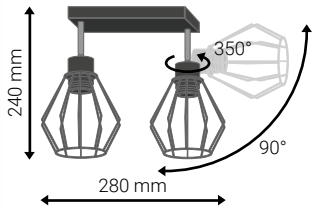

Otto LED E27



Index			EAN CODE
3771	2x E27 (max. 35W)* *not included	280 x 280 x 240 mm	5 904703 010395 >



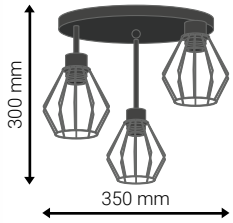

Otto LED E27



Index			EAN CODE
3778	3x E27 (max. 35W)* *not included	350 x 350 x 300 mm	5 904703 010449 >

Kinkiety
Ceiling lamp
Wandlampen
Fali lámpák

220-240V AC 50/60HZ	Aluminium + steel	IP20	Ø82 x 60 mm

Orbin LED GX53

9563

9561



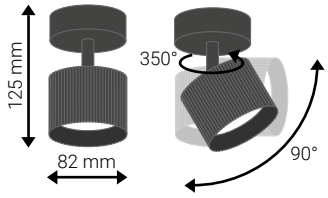

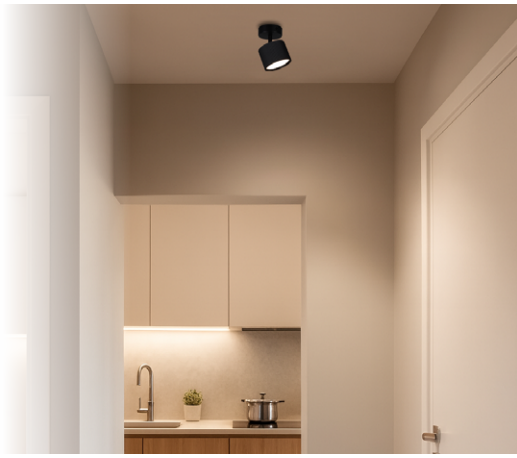

Index				EAN CODE
9563	1x GX53 (max. 12W)*	Ø82 x 125 mm	White	5 904703 021742 >
9561			Black	5 904703 021759 >

*not included

Orbin LED GX53

9575

9577



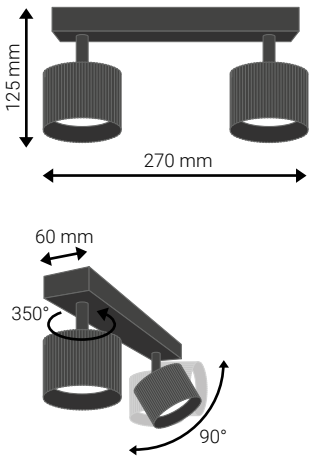

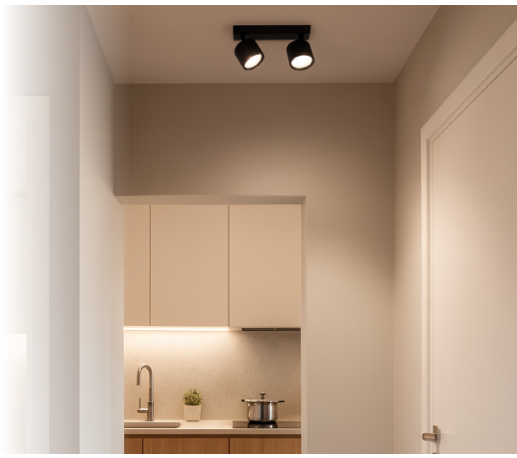

Index				EAN CODE
9575	2x GU10 (max. 12W)*	270 x 82 x 125 mm	White	5 904703 021711 >
9577			Black	5 904703 021704 >

*not included

220-240V AC 50/60HZ	Aluminium + steel	IP20	Ø82 x 60 mm



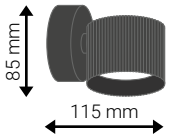

Orbin

LED GX53



Index				EAN CODE
9567	1x GX53 (max. 12W)*	82 x 115 x 85 mm	White	5 904703 021735 >
9573			Black	5 904703 021728 >

*not included



Costa Gold

LED G9

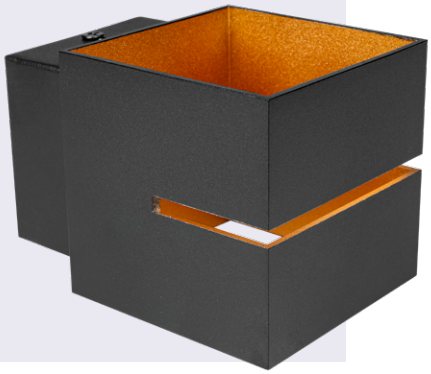

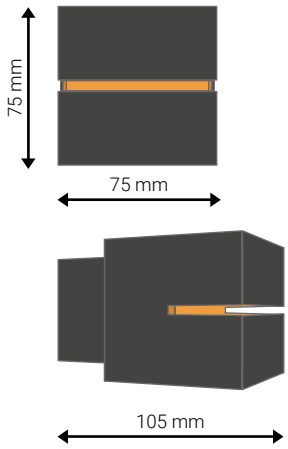



Index							EAN CODE
3344	1x G9 (max. 7W)* *not included	100-240V AC 50/60HZ	Aluminium	75 x 105 x 75 mm	Black + gold	IP20	5 908263 382107 >



220-240V AC 50/60HZ	2x G9 (max. 13W)*	Aluminium	IP20

*not included



Lisa LED G9

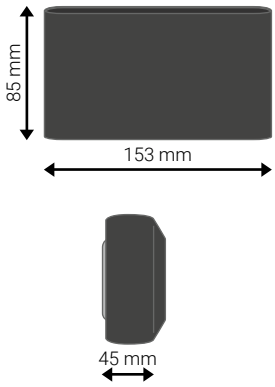



Index			EAN CODE
0192	153 x 45 x 85 mm	Black	5 908263 383487 >



Atria LED G9

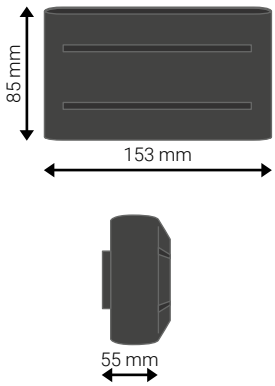



Index			EAN CODE
3098	153 x 55 x 85 mm	Black	5 908263 383470 >

Kinkiety
Ceiling lamp
Wandlampen
Fali lámpák

220-240V AC 50/60HZ	Aluminium + steel	IP20	Ø55 x 100 mm

Glamour LED GU10



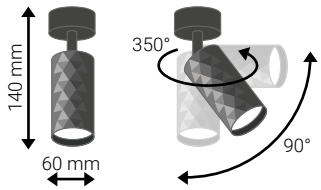



Index				EAN CODE
9732	1x GU10 (max. 35W)*	Ø60 x 160 mm	White	5 904703 021940 >
9733			Black + gold	5 904703 021957 >
9731			Black	5 904703 021933 >

*not included

Glamour LED GU10



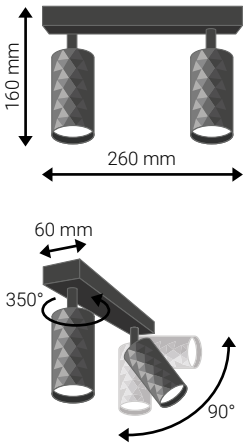



Index				EAN CODE
9735	2x GU10 (max. 35W)*	260 x 60 x 160 mm	White	5 904703 021971 >
9736			Black + gold	5 904703 021988 >
9734			Black	5 904703 021964 >

*not included

220-240V AC 50/60HZ	Aluminium + steel	IP20



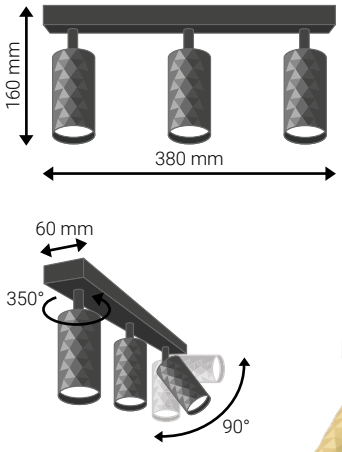

Glamour LED GU10



Index					EAN CODE
9738	3x GU10 (max. 35W)*	380 x 60 x 160 mm	Ø55 x 100 mm	White	5 904703 022008 >
9739				Black + gold	5 904703 022015 >
9737				Black	5 904703 021995 >

*not included



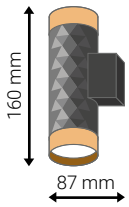

Glamour LED GU10



Index					EAN CODE
9605	2x GU10 (max. 35W)*	55 x 87 x 160 mm	Ø55 x 160 mm	White + gold	5 904703 021919 >
9603				Black + gold	5 904703 021926 >

*not included

Kinkiety
Ceiling lamp
Wandlampen
Fali lámpák

220-240V AC 50/60HZ	Aluminium + steel	IP20	Ø55 x 80 mm

Lucerno LED GU10



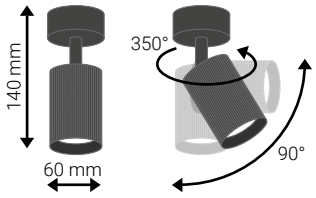



Index				EAN CODE
0466	1x GU10 (max. 35W)*	Ø60 x 140 mm	White	5 904703 021834 >
9455			Black + gold	5 904703 021827 >
9740			Black	5 904703 020233 >

*not included

Lucerno LED GU10



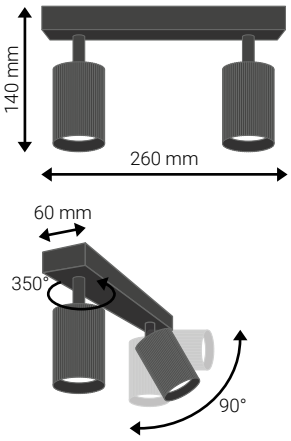



Index				EAN CODE
9465	2x GU10 (max. 35W)*	260 x 60 x 140 mm	White	5 904703 021803 >
9467			Black + gold	5 904703 021797 >
9464			Black	5 904703 021810 >

*not included

220-240V AC 50/60HZ	3x GU10 (max. 35W)*	Aluminium + steel	380 x 60 x 140 mm	IP20	Ø55 x 80 mm



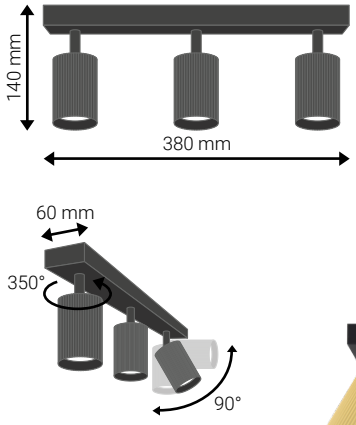

Lucerno

LED GU10

9556



9559



9468



Index		EAN CODE
9556	White	5 904703 021773 >
9559	Black+ gold	5 904703 021766 >
9468	Black	5 904703 021780 >



220-240V AC 50/60HZ	Aluminium + steel	Black	IP20	Ø54 x 100 mm

Simon LED GU10



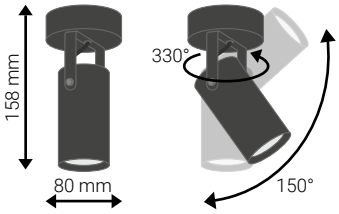



Index			EAN CODE
9611	1x GU10 (max. 10W)*	Ø80 x 158 mm	5 904703 020240 >

*not included

Simon LED GU10



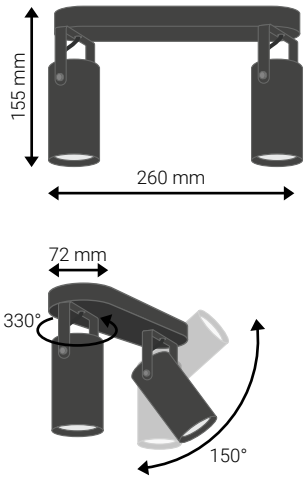



Index			EAN CODE
9613	2x GU10 (max. 10W)*	260 x 72 x 155 mm	5 904703 020202 >

*not included

220-240V AC 50/60HZ	Aluminium + steel	IP20



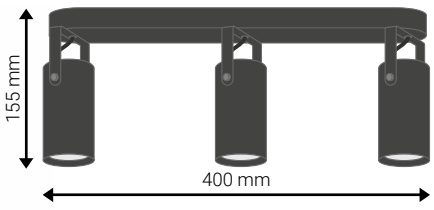

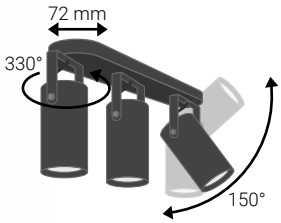



Simon LED GU10

Index					EAN CODE
9615	3x GU10 (max. 10W)* *not included	400 x 72 x 155 mm	Black	Ø54 x 100 mm	5 904703 020219 >



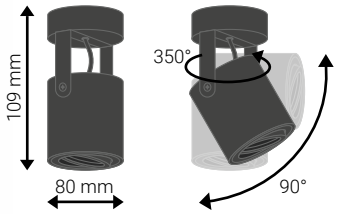

Abi LED GU10



Index					EAN CODE
4105	1x GU10 (max. 35W)*	Ø80 x109 mm	White	Ø80 x 84 mm	5 908263 388468 >
3404			Black		5 908263 388475 >

Kinkiety
Ceiling lamp
Wandlampen
Fali lámpák

220-240V AC 50/60HZ	1x GU10 (max. 35W)* *not included	Aluminium + steel + acrylic	IP20	Ø60 x 160 mm	Ø60 x 100 mm

Helis

LED GU10

9609

9607



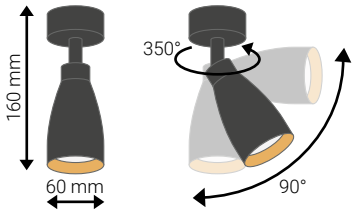



Index		EAN CODE
9609	White + chrome	5 904703 021896 >
9607	Black + gold	5 904703 021902 >



85-265V AC 50/60HZ	Steel + wood	Black + wood	IP20	Ø55 x 80 mm



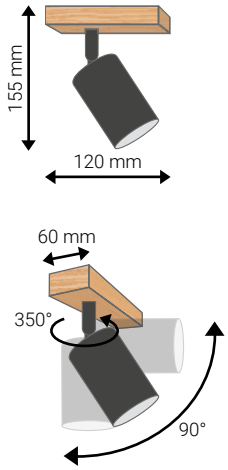

Dabi LED GU10



Index			EAN CODE
9207	1x GU10 (max. 35W)*	120 x 60 x 155 mm	5 904703 018629 >

*not included



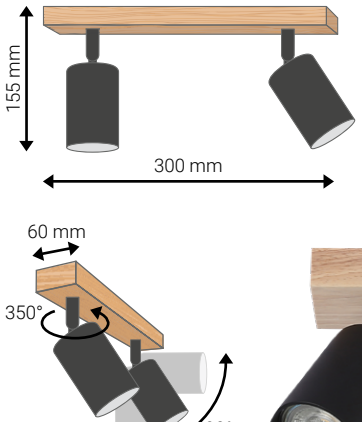

Dabi LED GU10



Index			EAN CODE
9208	2x GU10 (max. 35W)*	300 x 60 x 155 mm	5 904703 018636 >

*not included

Kinkiety
Ceiling lamp
Wandlampen
Fali lámpák

85-265V AC 50/60HZ	Steel + wood	Black + wood	IP20	Ø55 x 80 mm

Dabi LED GU10

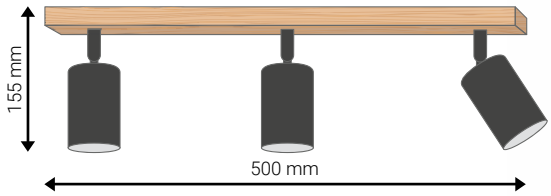





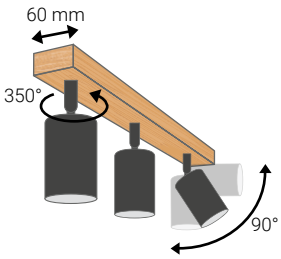

Index			EAN CODE
9209	3x GU10 (max. 35W)*	500 x 60 x 155 mm	5 904703 018643 >

*not included

Dabi LED GU10

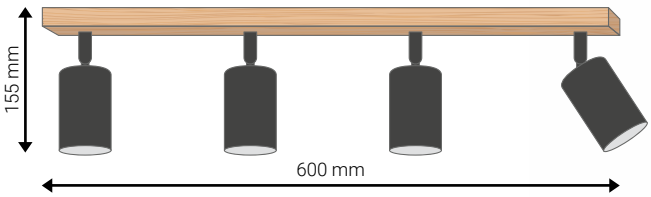





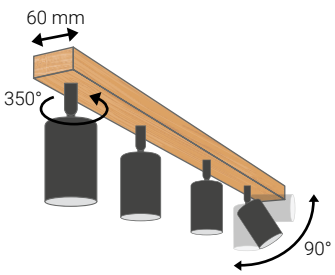

Index			EAN CODE
9210	4x GU10 (max. 35W)*	600 x 60 x 155 mm	5 904703 018650 >

*not included

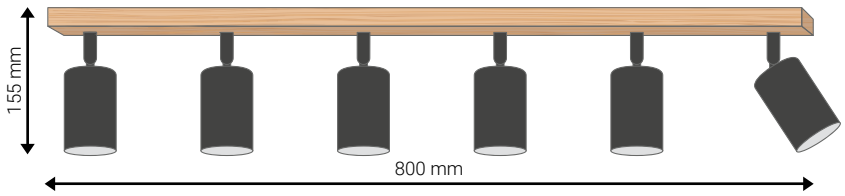

Dabi



Index								EAN CODE
9211	85-265V AC 50/60HZ	6x GU10 (max. 35W)* *not included	Steel + wood	Black + wood	IP20	Ø55 x 80 mm	800 x 60 x 155 mm	5 904703 018667 >



Kinkiety
Ceiling lamp
Wandlampen
Fali lámpák

220-240V AC 50/60HZ	Aluminium + steel	IP20	Ø55 x 80 mm

Bardo LED GU10

1462

4879



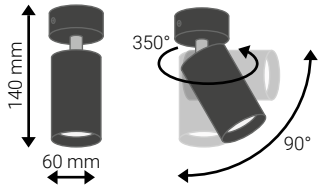



Index				EAN CODE
1462	1x GU10 (max. 35W)*	Ø60 x 140 mm	White + chrome	5 908263 386419 >
4879			Black + chrome	5 908263 384712 >

*not included

Bardo LED GU10

1480

6685



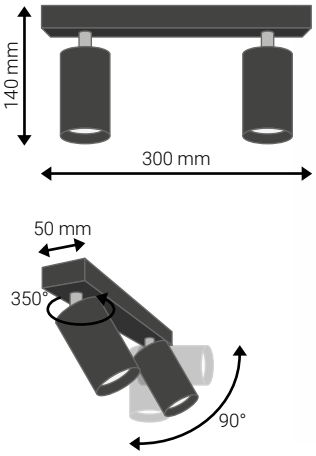



Index				EAN CODE
1480	2x GU10 (max. 2x 35W)*	300 x 55 x 140 mm	White + chrome	5 908263 386426 >
6685			Black + chrome	908263 384729

*not included



Kinkiety
Ceiling lamp
Wandlampen
Fali lámpák

220-240V AC 50/60HZ	Aluminium + steel	IP20	Ø55 x 80 mm

Bardo

LED GU10



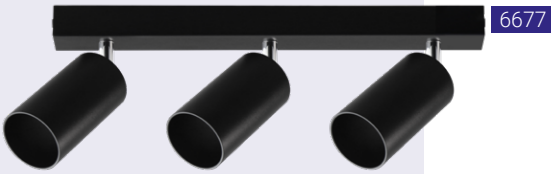



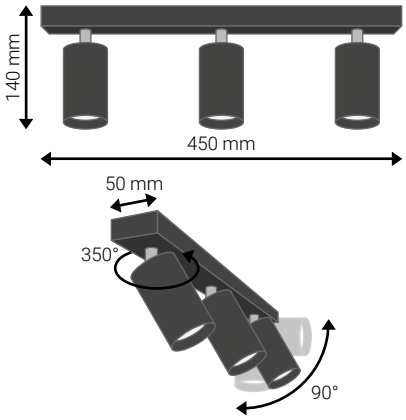

Index				EAN CODE
1359	3x GU10 (max. 35W)*	450 x 55 x 140 mm	White + chrome	5 908263 386433 >
6677			Black + chrome	5 908263 384736 >

*not included

Bardo

LED GU10







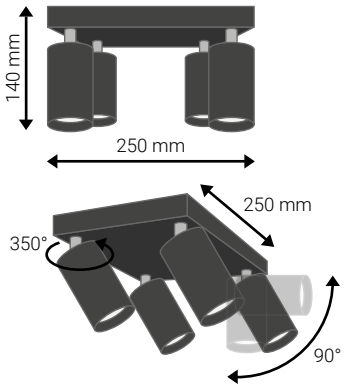

Index				EAN CODE
1389	4x GU10 (max. 35W)*	250 x 250 x 140 mm	White + chrome	5 908263 386440 >
1298			Black + chrome	5 908263 384743 >

*not included

220-240V AC 50/60HZ	Aluminium + steel	IP20	Ø55 x 80 mm

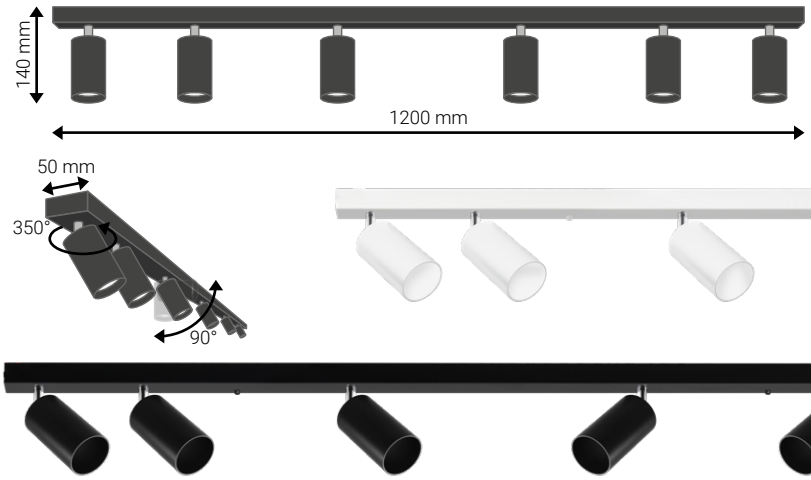

Bardo

LED GU10

1417



3131

Index				EAN CODE
1417	6x GU10 (max. 35W)*	1200 x 55 x 140 mm	White + chrome	5 908263 386457 >
3131			Black + chrome	5 908263 384750 >

*not included



220-240V AC 50/60HZ	Aluminium + PC	IP20	Ø58 x 100 mm

Sento LED GU10



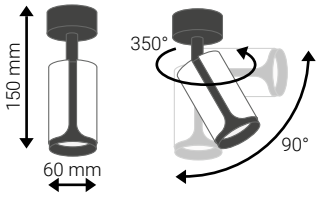



Index			EAN CODE
2529	1x GU10 (max. 35W)*	Ø60 x 150 mm	5 904703 010098 >

*not included

Sento LED GU10



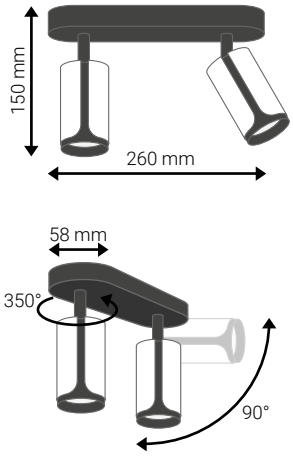



Index			EAN CODE
2528	2x GU10 (max. 35W)*	260 x 58 x 150 mm	5 904703 010104 >

*not included

220-240V AC 50/60HZ	Aluminium + PC	IP20	Ø58 x 100 mm



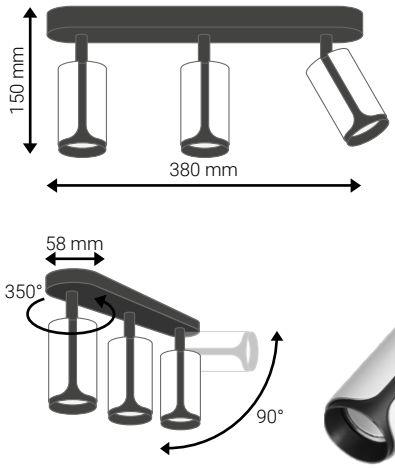

Sento LED GU10



Index			EAN CODE
2769	3x GU10 (max. 35W)*	380 x 58 x 150 mm	5 904703 010111 >

*not included



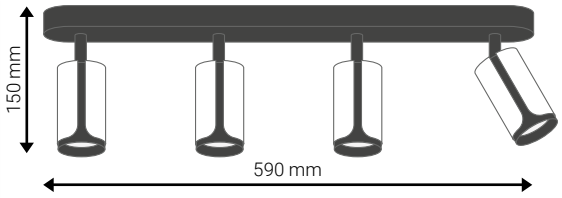

Sento LED GU10



Index			EAN CODE
2530	4x GU10 (max. 35W)*	590 x 58 x 150 mm	5 904703 010135 >

*not included

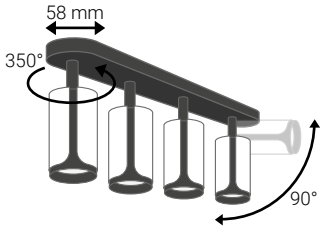

Kinkiety
Ceiling lamp
Wandlampen
Fali lámpák

220-240V AC 50/60HZ	Aluminium	IP20	Black	Ø60x 150 mm

Rita LED GU10



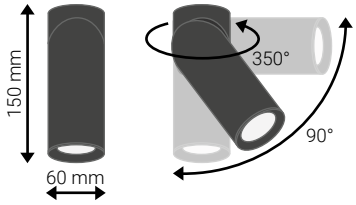



Index			EAN CODE
2771	1x GU10 (max. 35W)* *not included	Ø60 x 150 mm	5 908263 386709 >

Rita LED GU10





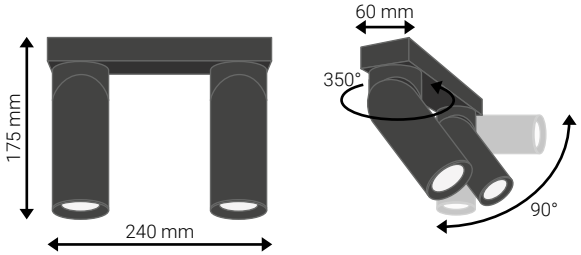

Index			EAN CODE
4280	2x GU10 (max. 35W)* *not included	240 x 60 x 175 mm	5 908263 386716 >

220-240V AC 50/60HZ	Aluminium	IP20	Black	Ø60x 150 mm



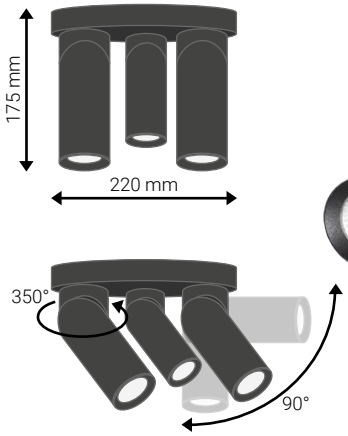

Rita LED GU10



Index			EAN CODE
2912	3x GU10 (max. 35W)* *not included	Ø220 x 175 mm	5 903002 032589 >



Rita LED GU10



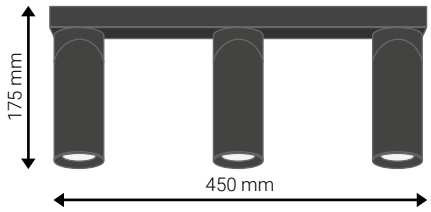

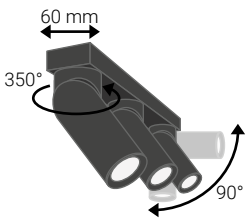

Index			EAN CODE
2944	3x GU10 (max. 35W)* *not included	450 x 60 x 175 mm	5 908263 386723 >

Kinkiety
Ceiling lamp
Wandlampen
Fali lámpák

220-240V AC 50/60HZ	Aluminium + ABS	IP20	Ø60 x 95 mm

Timo LED GU10



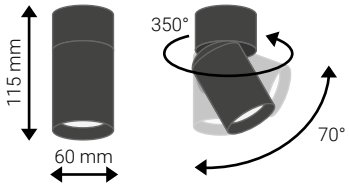



Index				EAN CODE
1799	1x GU10 (max. 35W)*	Ø60 x 115 mm	White	5 904703 004240 >
1695			Black	5 904703 004233 >

*not included

Timo LED GU10



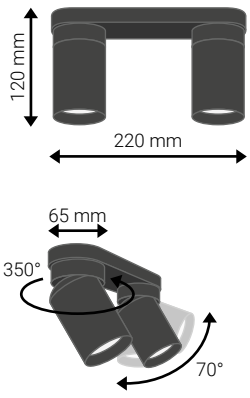



Index				EAN CODE
1707	2x GU10 (max. 35W)*	220 x 65 x 120 mm	White	5 904703 004226 >
1727			Black	5 904703 004219 >

*not included

220-240V AC 50/60HZ	Aluminium + steel	IP20	Ø60x 95 mm



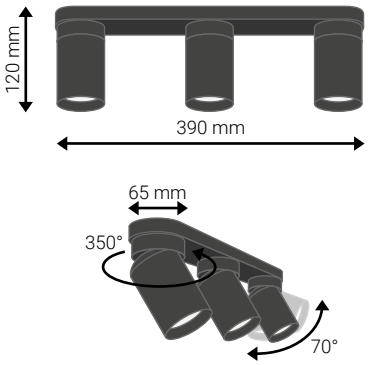

Timo LED GU10



Index				EAN CODE
1706	3x GU10 (max. 35W)*	390 x 65 x 120 mm	White	5 904703 004202 >
1738			Black	5 904703 004189 >

*not included



Timo LED GU10



Index				EAN CODE
1812	4x GU10 (max. 35W)*	600 x 65 x 120 mm	White	5 904703 004165 >
1815			Black	5 904703 004141 >

*not included

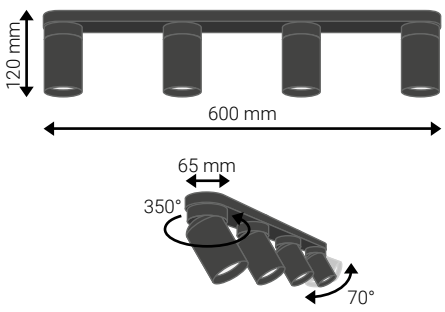

Kinkiety
Ceiling lamp
Wandlampen
Fali lámpák

220-240V AC 50/60HZ	Aluminium	IP20	Black + gold	Ø60 x 100 mm

Eris Gold LED GU10



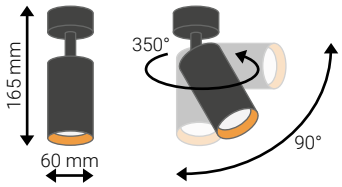

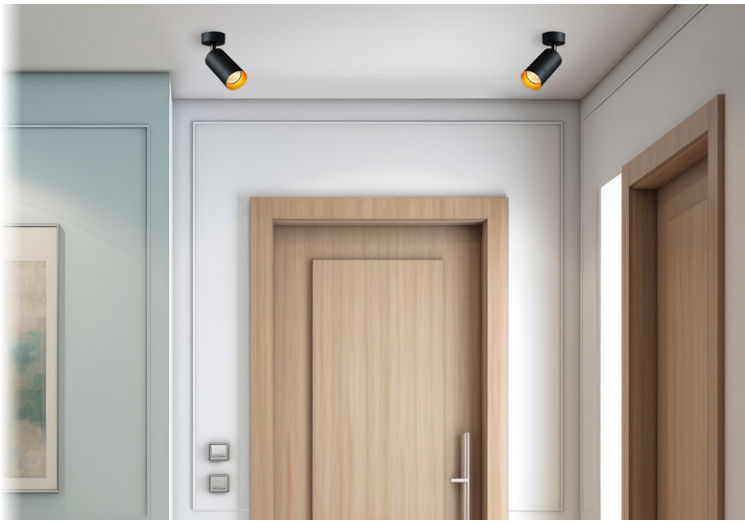

Index			EAN CODE
3289	1x GU10 (max. 35W)* *not included	Ø60 x 165 mm	5 908263 386747 >

Eris Gold LED GU10



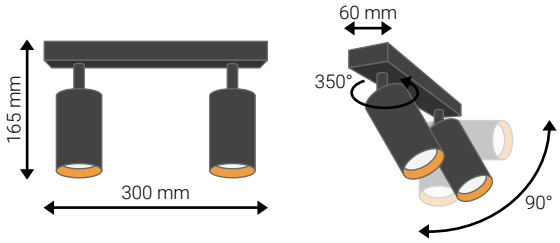



Index			EAN CODE
4807	2x GU10 (max. 35W)* *not included	300 x 60 x 165 mm	5 908263 386754 >

220-240V AC 50/60HZ	Aluminium	IP20	Black + gold	Ø60 x 100 mm



Eris Gold LED GU10



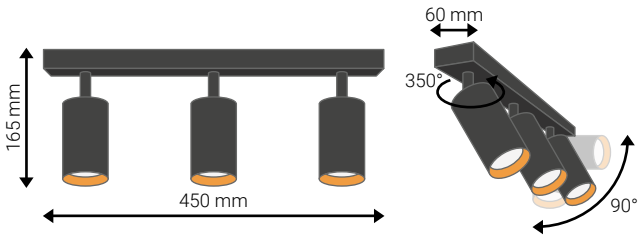

Index			EAN CODE
4970	3x GU10 (max. 35W)* *not included	450 x 60 x 165 mm	5 908263 386761 >

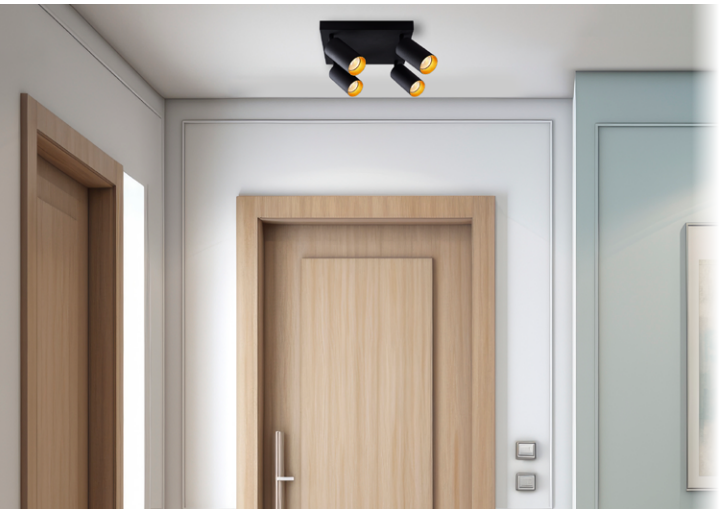

Eris Gold LED GU10



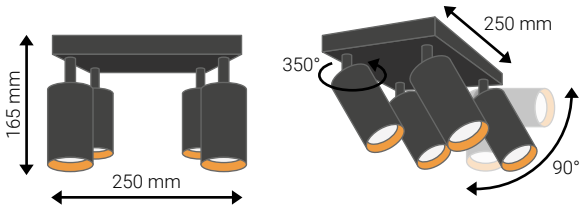

Index			EAN CODE
4098	4x GU10 (max. 35W)* *not included	250 x 250 x 165 mm	5 908263 386778 >

Eris Gold



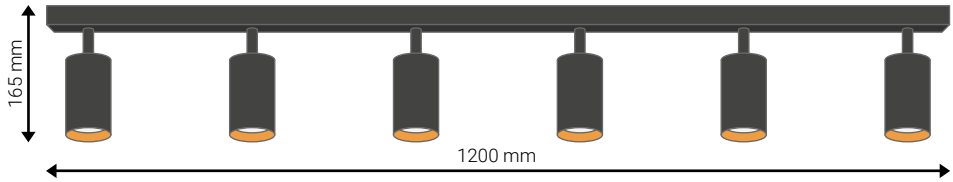

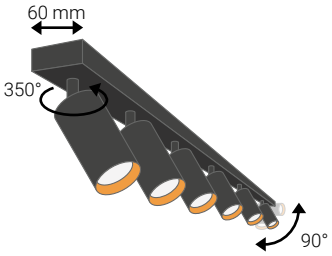

Index								EAN CODE
4356	220-240V AC 50/60HZ	6x GU10 (max. 35W)* *not included	Aluminium	IP20	Ø60 x 100 mm	1200 x 60 x 165 mm	Black + gold	5 908263 386785 >



220-240V AC 50/60HZ	Aluminium	IP20	Black	Ø120 x 17 mm



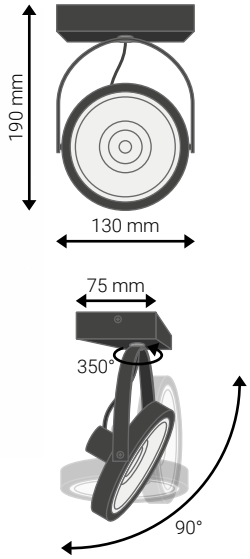

Leon LED AR111



Index			EAN CODE
0825	1x AR111 (max. 35W)* *not included	130 x 75 x 190 mm	5 904703 001850 >



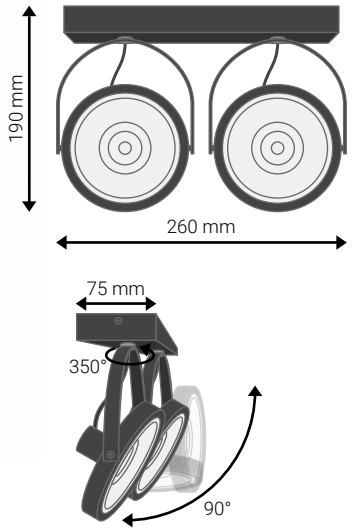

Leon LED AR111



Index			EAN CODE
0827	2x AR111 (max. 35W)* *not included	260 x 75 x 190 mm	5 904703 001867 >

Kinkiety do czytania
Reading wall lamp
Lesewandlampen
Olvasó fali lámpák

220-240V AC 50/60HZ	1x GU10 (max. 35W)*	Aluminium + steel	IP20	Ø55 x 100 mm

*not included

Klemens

LED GU10



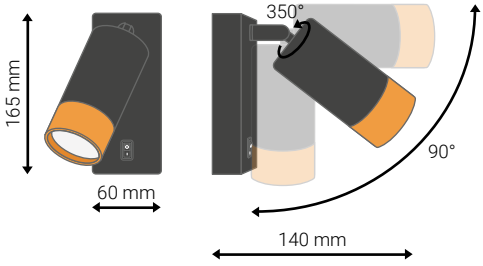



1x On/Off

On/Off switch

Index			EAN CODE
1629	60 x 140 x 165 mm	White + gold	5 904703 002550 >

Klemens

LED GU10

1639

1661



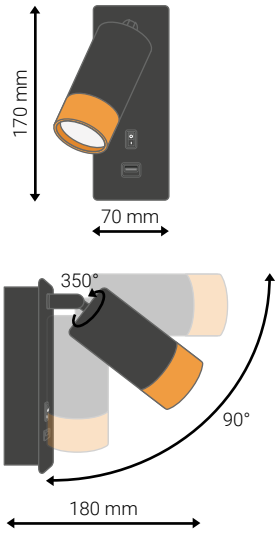



USB A+C

1x On/Off

USB type A+C sockets and On/Off switch

Index			EAN CODE
1639	70 x 180 x 170 mm	White + gold	5 904703 002574 >
1661		Black + gold	5 904703 002581 >

220-240V AC 50/60HZ	1x GU10 (max. 35W)*	Aluminium + steel + acrylic	IP20	Ø55 x 100 mm

*not included



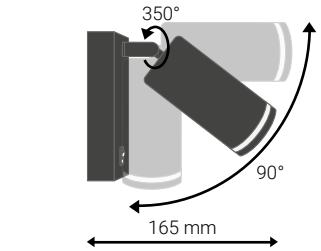



Ring

LED GU10

0932



0296



On/Off switch

Index			EAN CODE
0932	60 x 140 x 165 mm	White	5 904703 001836 >
0296		Black	5 908263 386662 >



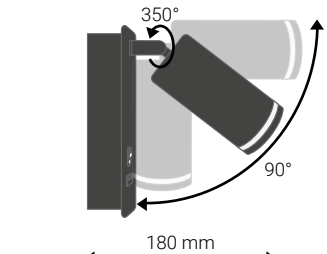



Ring

LED GU10

8306



0933





USB type A+C sockets and On/Off switch

Index			EAN CODE
8306	70 x 180 x 170 mm	White	5 904703 006121 >
0933		Black	5 904703 001843 >

Kinkiety do czytania
Reading wall lamp
Lesewandlampen
Olvasó fali lámpák

220-240V AC 50/60HZ	1x GU10 (max. 35W)*	Aluminium + steel	IP20

*not included

Kaliso

LED GU10

8704



1255



USB socket

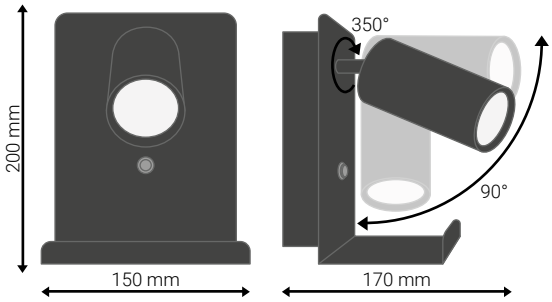



Index				EAN CODE
8704	150 x 170 x 200 mm	White	Ø55 x 100 mm	5 904703 015468 >
1255		Black		5 903002 039649 >

Timo

LED GU10

0468



0462



USB type A+C sockets

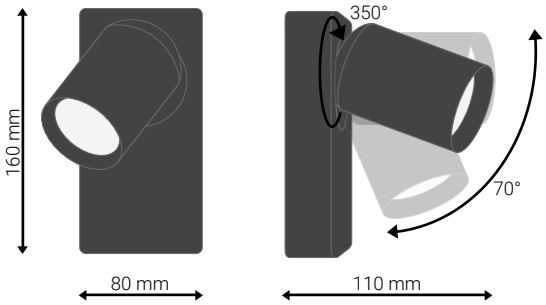



Index				EAN CODE
0468	80 x 110 x 160 mm	White	Ø60 x 95 mm	5 904703 010951 >
0462		Black		5 904703 010944 >

220-240V AC 50/60HZ	1x G9 (max. 35W)*	Aluminium + steel	IP20	Ø25 x 100 mm

*not included



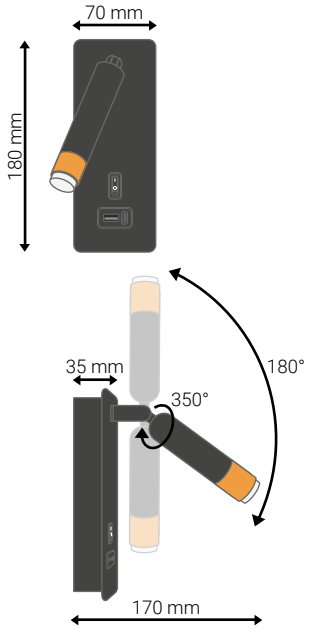

Piero LED G9





USB type A+C sockets
and On/Off switch

Index			EAN CODE
1444	70 x 170 x 180 mm	Black + gold	5 904703 010722 >



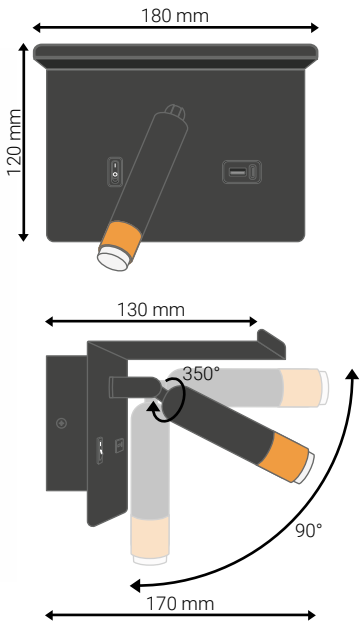

Piero LED G9





USB type A+C sockets
and On/Off switch

shelf with
a 10 mm edge

Index			EAN CODE
1465	180 x 170 x 120 mm	Black + gold	5 904703 010753 >

Kinkiety do czytania
Reading wall lamp
Lesewandlampen
Olvasó fali lámpák

220-240V AC 50/60HZ	1x G9 (max. 35W)* + LED 7W	Aluminium + steel + acrylic	4000K**	IP20	Ø25 x 100 mm

*not included

**LED backlight

Piero LED G9

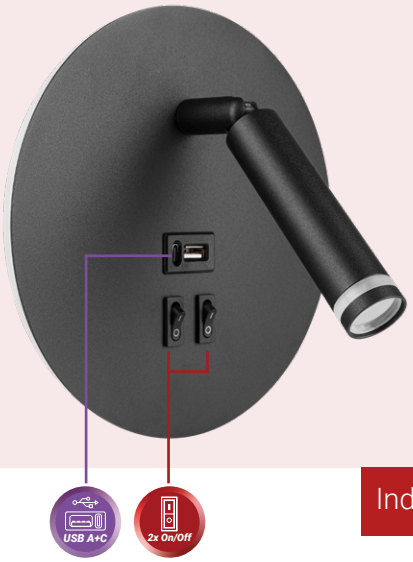

USB type A+C sockets and On/Off switches (1x G9 light, 1x 7W LED backlight)

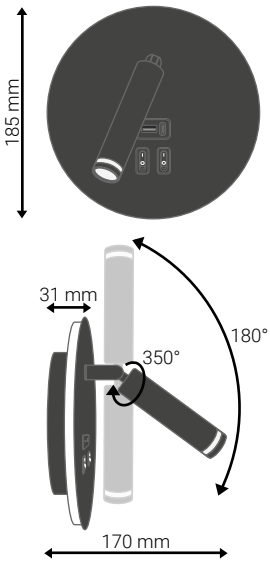

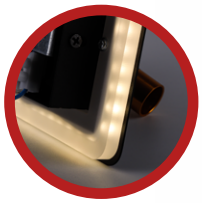

LED backlight



Index					EAN CODE
1365	7W	420lm	Ø185 x 170 mm	Black	5 904703 010685 >

Piero LED G9



USB type A+C sockets and On/Off switches (1x G9 light, 1x 7W LED backlight)

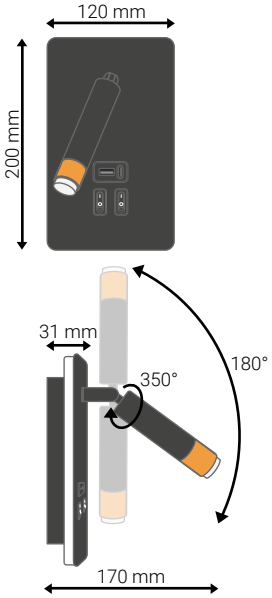



LED backlight



Index					EAN CODE
1439	7W	420lm	120 x 170 x 200 mm	Black + gold	5 904703 010692 >

200-240V AC 50/60HZ	1x G9 (max. 20W)*	Steel + glass	IP20

*not included



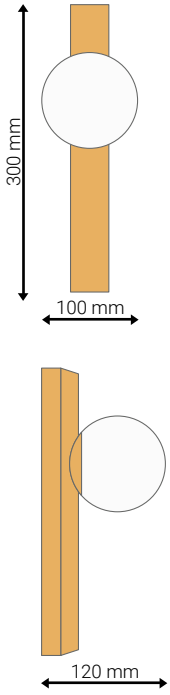

Bali

LED G9

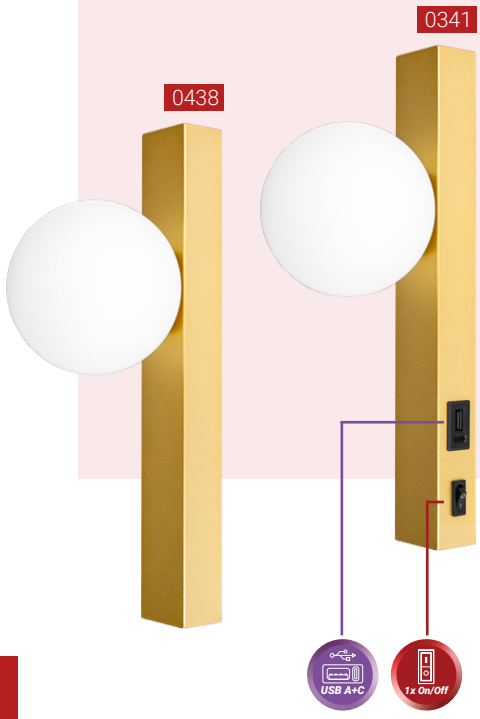

USB type A+C sockets and On/Off switch

Index				EAN CODE
0341	100 x 120 x 300 mm	Gold	USB type A+C sockets	5 904703 020905 >
0438			—	5 904703 020899 >

Glass lampshade

for reading wall lamps of the Bali series

G9

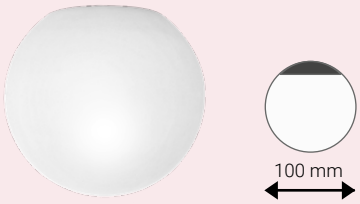

Index					EAN CODE
9767	1x G9*	Milky glass	Ø100 x 100 mm	White	5 904703 022565 >

*not included

Kinkiety do czytania
Reading wall lamp
Lesewandlampen
Olvasó fali lámpák

220-240V AC 50/60HZ	LED COB	3W	300lm	50 x 360 x 90 mm	Aluminium + steel	IP20	Ø25 x 60 mm

Leo LED

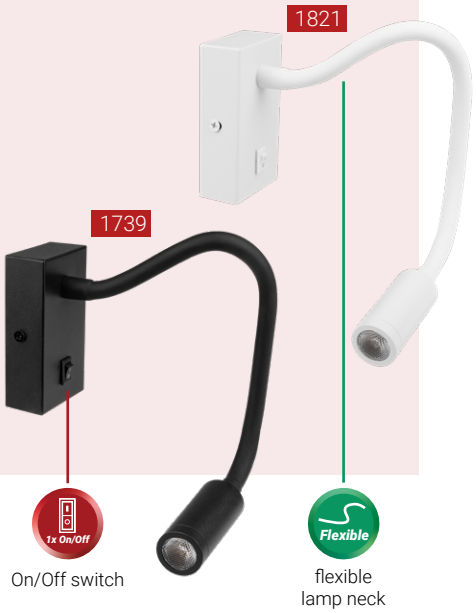

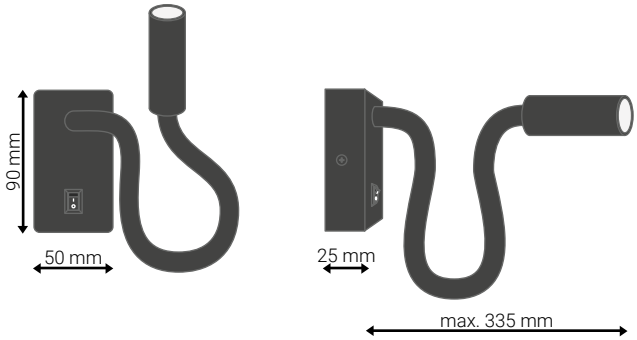

Index		EAN CODE
1821	White	5 908263 384330 >
1739	Black	5 908263 384323 >



220-240V AC 50/60HZ	1x GU10 (max. 35W)* *not included	Aluminium	IP54

IP54 GU10

LED GU10 IP54

7296



7297



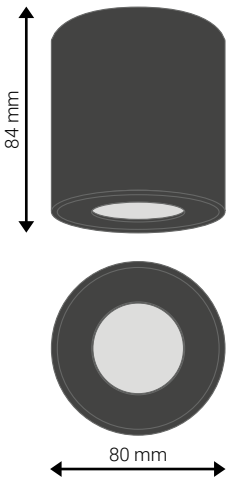



Index			EAN CODE
7296	Ø80 x 84 mm	White	5 908263 386471 >
7297		Black	5 908263 386488 >

IP54 GU10

LED GU10 IP54

9581



9579



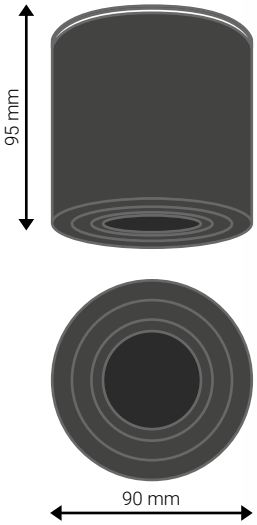



Index			EAN CODE
9581	Ø90 x 95 mm	White	5 904703 021681 >
9579		Black	5 904703 021698 >

220-240V AC 50/60HZ	1x GU10 (max. 35W)* *not included	Aluminium	IP20



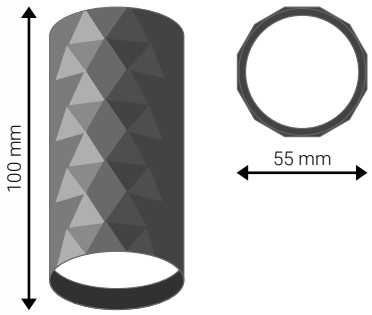

Glamour

LED GU10



Index			EAN CODE
9589	Ø55 x 100 mm	White	5 904703 022046 >
9583		Gold	5 904703 022060 >
9587		Black	5 904703 022053 >



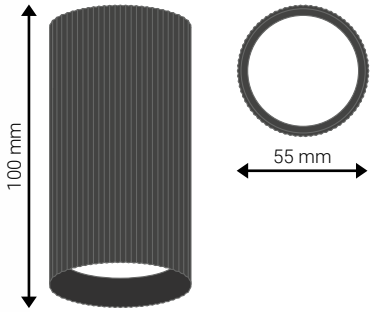

Lucerno

LED GU10



Index			EAN CODE
9597	Ø55 x 100 mm	White	5 904703 021650 >
9593		Gold	5 904703 021674 >
9595		Black	5 904703 021667 >

220-240V AC 50/60HZ	1x GU10 (max. 35W)* *not included	IP20

Klemens

LED GU10



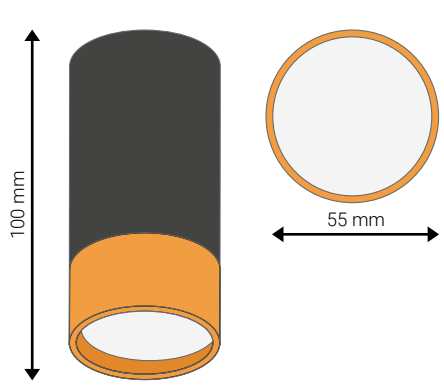



Index				EAN CODE
1618	Ø55 x 100 mm	Aluminium	White + gold	5 904703 002543 >
1620			Black + gold	5 904703 002635 >

Sento

LED GU10



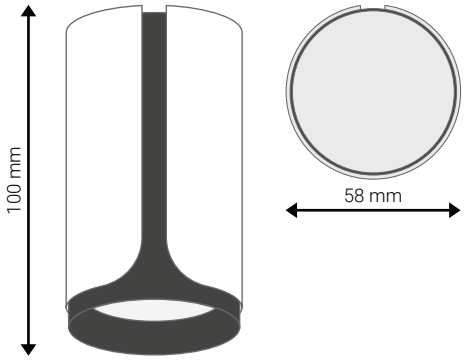



Index				EAN CODE
2527	Ø58 x 100 mm	Aluminum + PC	White + black	5 904703 010081 >

220-240V AC 50/60HZ	1x GU10 (max. 35W)* *not included	Aluminium	IP20

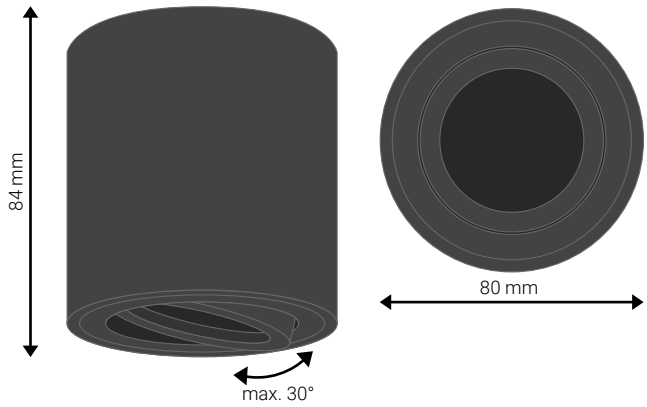

GU10 LED GU10

8794



8795



Index			EAN CODE
8794	Ø80 x 84 mm	White	5 904703 015819 >
8795		Black	5 904703 015826 >



220-240V AC 50/60HZ	1x GU10 (max. 35W)* *not included	IP20

GU10 LED GU10



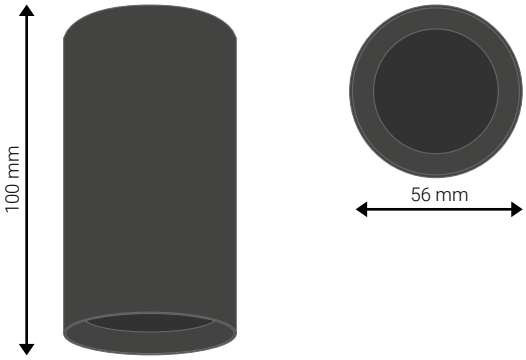

Index				EAN CODE
3755	Ø56 x 100 mm	Aluminium	White	5 903002 036068 >
3733			Black	5 903002 036051 >

GU10 LED GU10



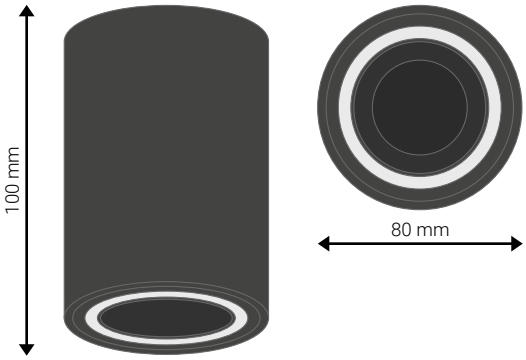

Index				EAN CODE
1409	Ø80 x 100 mm	Aluminum + acrylic ring	White	5 903002 033425 >
1431			Black	5 903002 033418 >



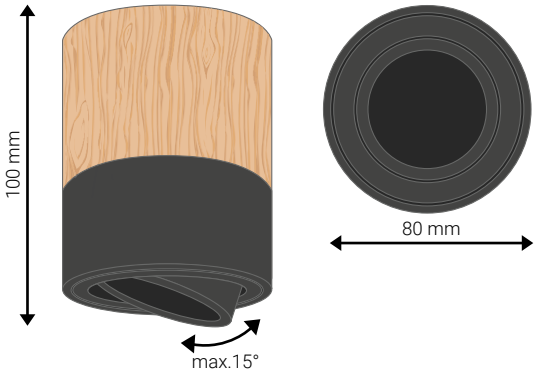

GU10



Index							EAN CODE
0552	220-240V AC 50/60HZ	1x GU10 (max. 9W)* *not included	Ø80 x 100 mm	Aluminium	IP20	Black + wooden	5 904703 013693 >



220-240V AC 50/60HZ	1x GU10 (max. 35W)* *not included	Ø85 x 110 mm	Aluminium	IP20

Gold

LED GU10



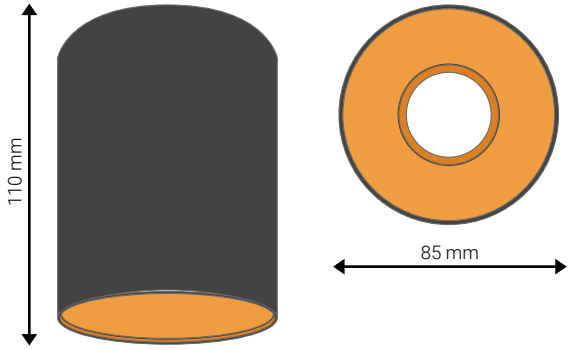

Index		EAN CODE
8524	White + gold	5 904703 009955 >
0307	Black + gold	5 908263 388369 >



220-240V AC 50/60HZ	1x GU10 (max. 35W)* *not included	Aluminium	IP20

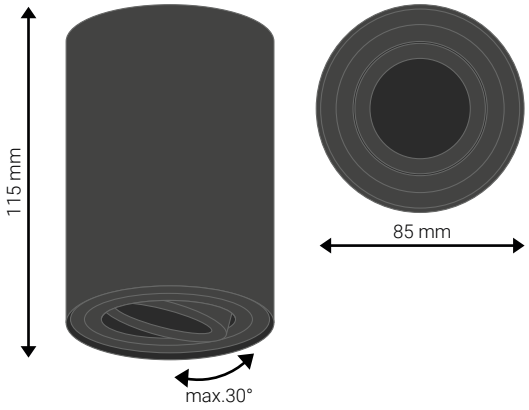

GU10 LED GU10



Index			EAN CODE
1124	Ø85 x 115 mm	White	5 903002 036839 >
1088		Black	5 903002 036822 >

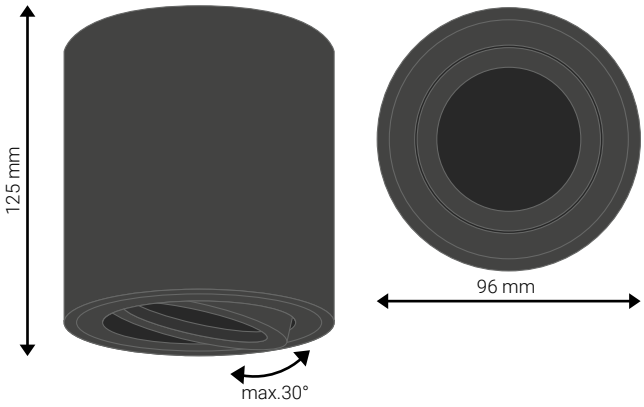

GU10 LED GU10



Index			EAN CODE
0133	Ø96 x 125 mm	White	5 903002 038086 >
0137		Black	5 903002 038093 >

220-240V AC 50/60HZ	Aluminium	IP20

AR111 LED AR111



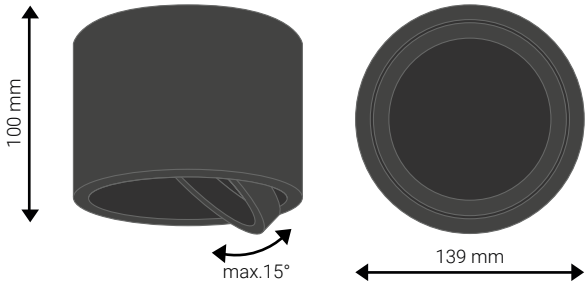

Index				EAN CODE
0361	1x AR111 (max. 35W)*	Ø139 x 100 mm	White	5 908263 388376 >
0380			Black	5 908263 388383 >

*not included

AR111 LED AR111



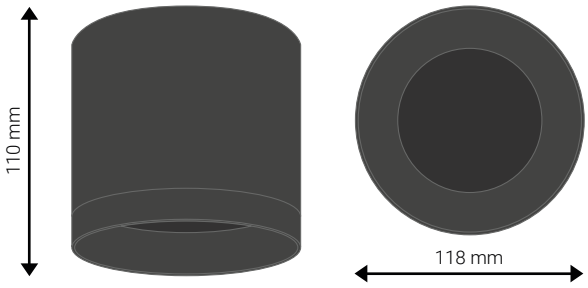

Index				EAN CODE
2894	1x AR111 (max. 16W)*	Ø118 x 110 mm	White	5 904703 013655 >
2895			Black	5 904703 013648 >

*not included

220-240V AC 50/60HZ	1x AR111 (max. 16W)* *not included	Ø118 x 114 mm	Aluminium + glass	IP44

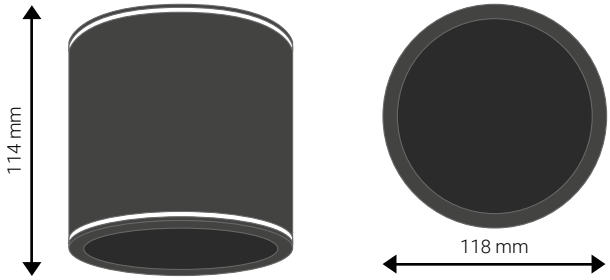

AR111



Index		EAN CODE
3774	White	5 904703 013600 >
6534	Black	5 904703 013563 >



220-240V AC 50/60HZ	1x GX53 (max. 12W)* *not included	Ø82 x 60 mm

Grandi



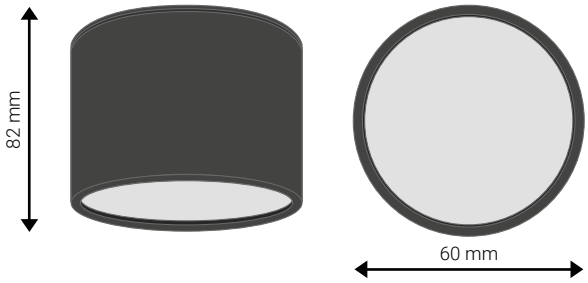

Index				EAN CODE
2501	Aluminium + glass	IP54	White	5 904703 010647 >
2488			Black	5 904703 010654 >

Sino



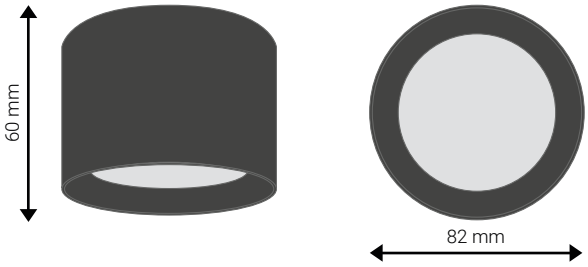

Index				EAN CODE
3355	Aluminium	IP20	White	5 904703 010272 >
2502			Black	5 904703 010289 >

220-240V AC 50/60HZ	1x GX53 (max. 12W)* *not included	Aluminium	IP20

Golda LED GX53

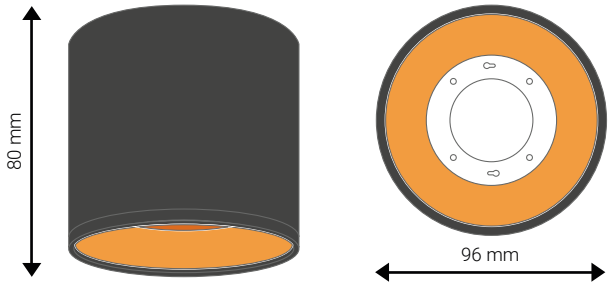



Index			EAN CODE
2484	Ø96 x 80 mm	White + gold	5 904703 010739 >
2485		Black + gold	5 904703 010746 >

Apilo LED GX53

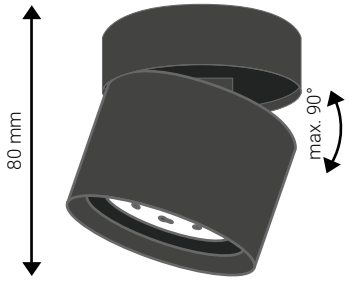

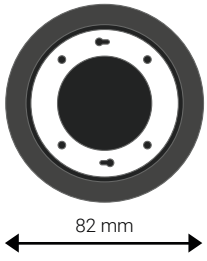



Index			EAN CODE
2486	Ø82 x 80 mm	White	5 904703 010791 >
2487		Black	5 904703 010807 >

220-240V AC 50/60HZ	1x GX53 (max. 12W)* *not included	Ø82 x 60 mm	Aluminium	IP20

Gisele

LED GX53



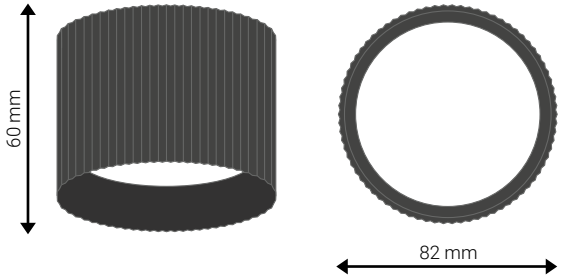

Index		EAN CODE
9479	White	5 904703 020011 >
9480	Gold	5 904703 020028 >
9478	Black	5 904703 018674 >



220-240V AC 50/60HZ	1x GX53 (max. 12W)* *not included	Ø85 x 60 mm	Aluminium	IP20

Lumet

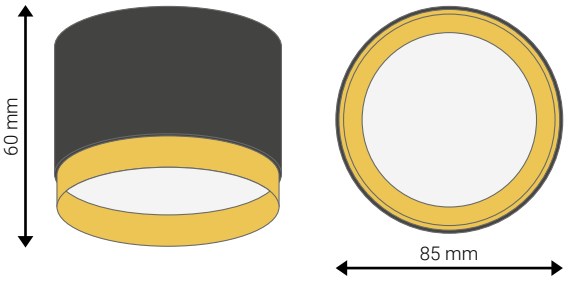



Index		EAN CODE
9601	White + gold	5 904703 021636 >
9599	Black + gold	5 904703 021643 >



220-240V AC 50/60HZ	1x GU10 (max. 35W)* *not included	IP20

GU10 LED GU10

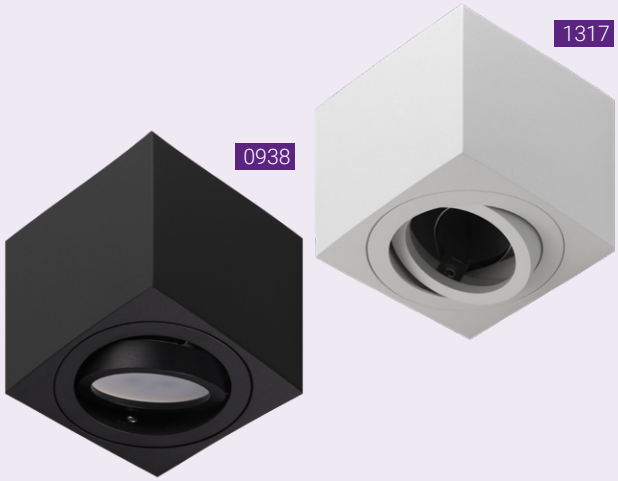

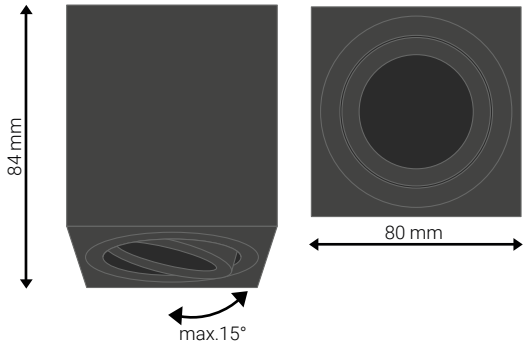

Index				EAN CODE
1317	80 x 80 x 84 mm	Aluminium	White	5 908263 384545 >
0938			Black	5 908263 384538 >

GU10 LED GU10



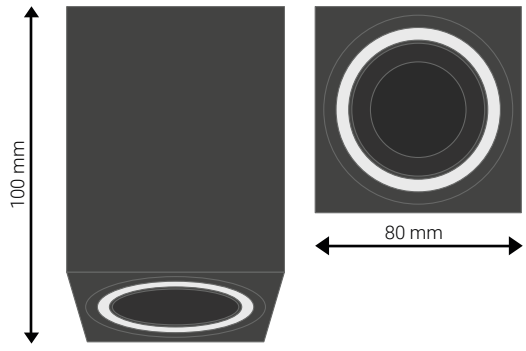

Index				EAN CODE
4348	80 x 80 x 100 mm	Aluminium + acrylic ring	White	5 904703 000563 >
1432			Black	5 904703 000570 >

220-240V AC 50/60HZ	1x GU10 (max. 35W)* *not included	90 x 90 x 100 mm	Aluminium	IP20

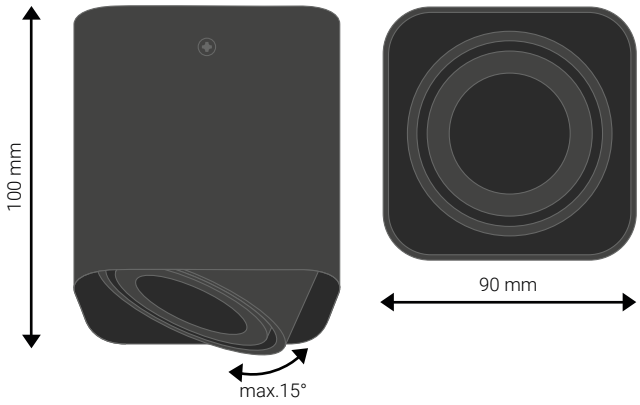

GU10 LED GU10



Index		EAN CODE
4930	White	5 904703 000648 >
0210	Black	5 904703 000655 >



220-240V AC 50/60HZ	1x GU10 (max. 35W)* *not included	IP20	Aluminium

Nemo LED GU10



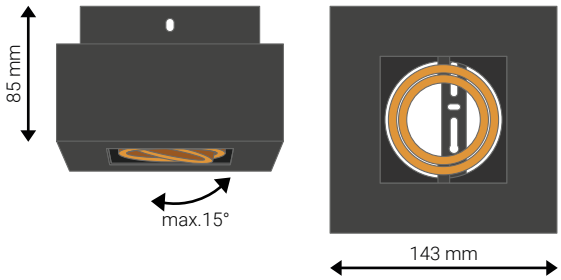

Index			EAN CODE
0612	143 x 143 x 85 mm	Black + gold center	5 908263 388413 >

Nemo LED GU10



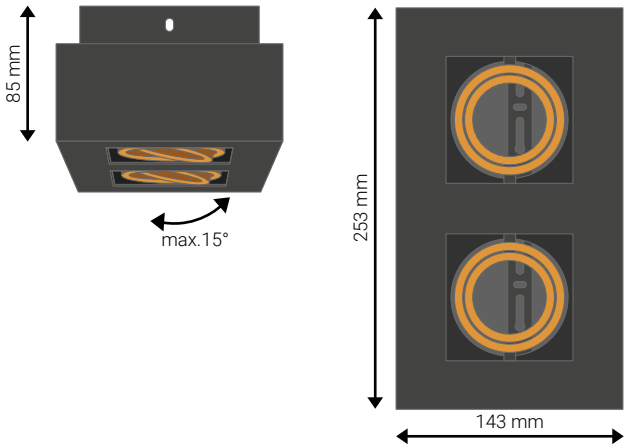

Index			EAN CODE
0595	253 x 143 x 85 mm	White + black center	5 908263 388406 >
0617		Black + gold center	5 908263 388420 >

220-240V AC 50/60HZ	Aluminium	IP20

Taris Gold

LED GU10



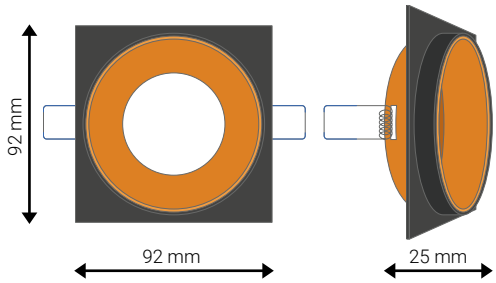

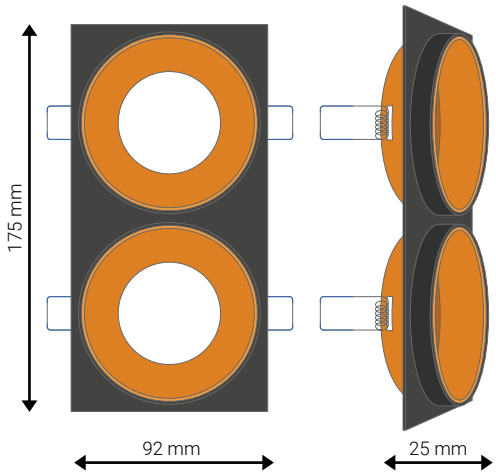

Index					EAN CODE
5210	1x GU10* (max. 35W)	92 x 92 x 25 mm	White + gold	Ø65 mm	5 908263 383524 >
5207			Black + gold		5 903002 035320 >
5208	2x GU10* (max. 35W)	175 x 92 x 25 mm	Black + white + gold	160 x 80 mm	5 903002 035320 >
5282			Black + gold		5 903002 035320 >

*not included

220-240V AC 50/60HZ	Aluminium	IP20

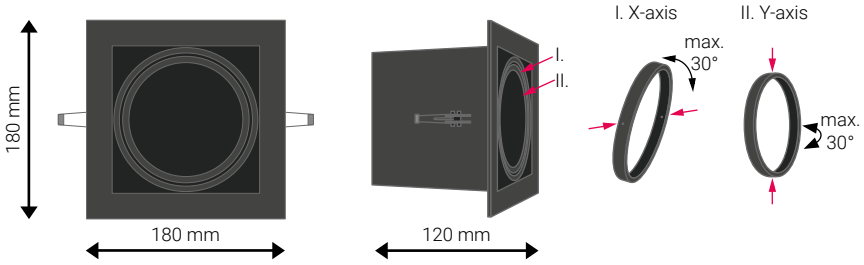

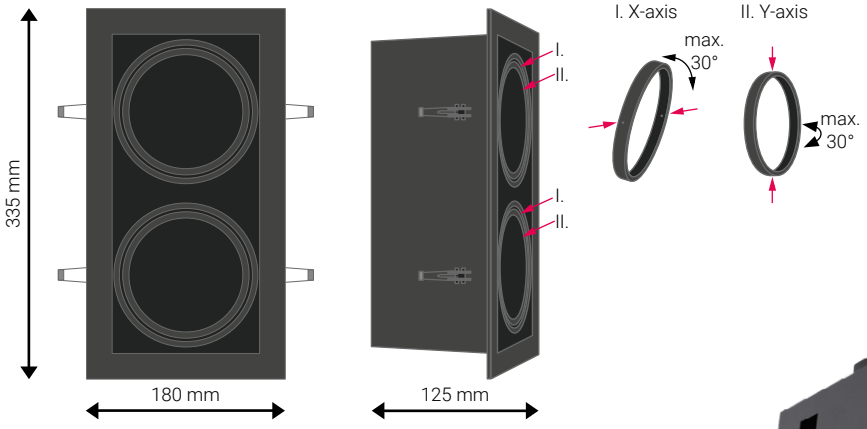

AR111 LED AR111







Index					EAN CODE
0349	1x AR111* (max. 35W)	180 x 180 x 120 mm	Black	150 x 150 mm	5 908263 388345 >
0350	2x AR111* (max. 35W)	335 x 180 x 125 mm		310 x 158 mm	5 908263 388352 >

*not included

Oprawy halogenowe
Halogen fixtures
Halogenleuchten
Halogén lámpatestek

220-240V AC 50/60HZ

1x GU10* (max. 35W)

*not included

Holi



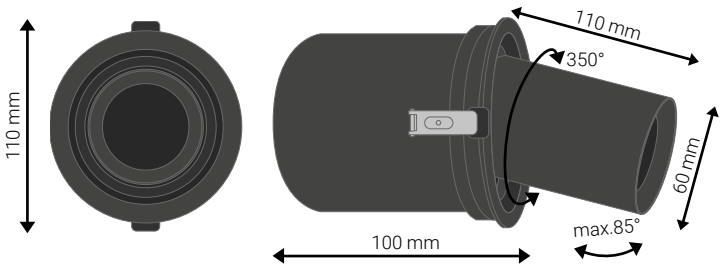



Index						EAN CODE
1202	Aluminium + PC	IP20	Ø110 x 200 mm	Black + white	Ø95 mm	5 904703 013686 >
1299				Black		5 904703 013679 >

IP44



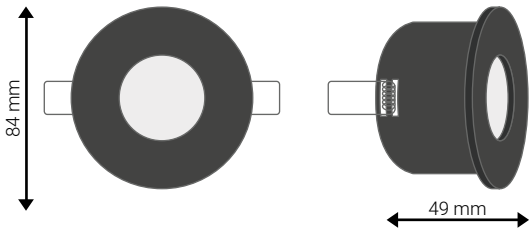

Index						EAN CODE
4872	Aluminium	IP44	Ø84 x 49 mm	Black + white	Ø75 mm	5 904703 002840 >

1x GU10*	Aluminium + glass	IP20

*not included

Mira LED GU10



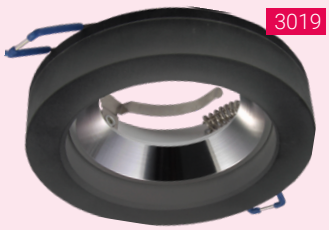





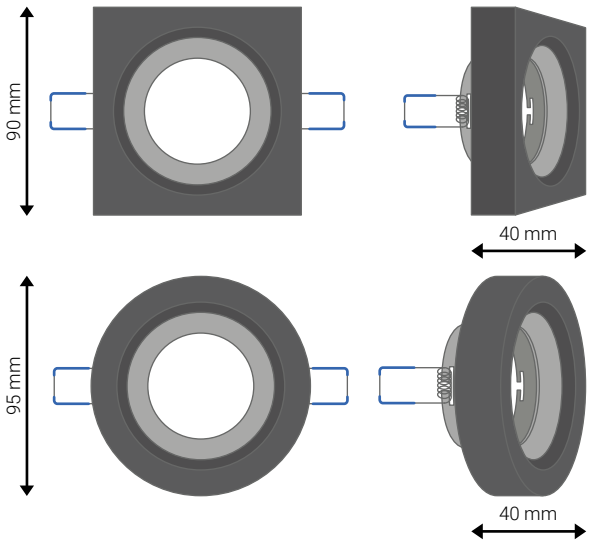

**A socket must be purchased separately to mount the bulb

Index				**		EAN CODE
2891	Square	90 x 90 x 40 mm	White + silver middle	4572	Ø70 mm	5 903002 032459 >
3019	Round	Ø95 x 40 mm	Black + silver middle			5 903002 032480 >
2892	Square	90 x 90 x 40 mm				5 903002 032466 >

100-265V AC 50/60HZ	Steel + PC	White

Lobo LED E27





Index				EAN CODE
8910	1x E27* (max. 60W)	Ø255 x 80 mm	IP44	5 904703 017080 >
8911	2x E27* (max. 60W)	Ø290 x 85 mm		5 904703 017066 >

*not included

Lobo LED E27
motion sensor



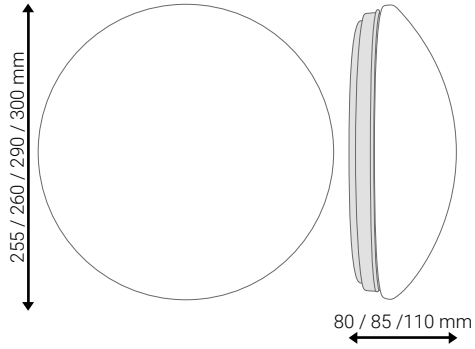

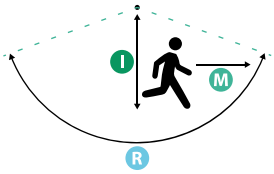

I Installation height: 3-4 m
M Motion detection: 0,3-1 m/s
R Detection range: 120°

Index							EAN CODE
1263	1x E27* (max. 60W)	40s (+/-5s)	5-8 m	10lux	Ø260 x 110 mm	IP20	5 904703 008750 >
1630	2x E27* (max. 60W)				Ø300 x 110 mm		5 904703 008668 >

*not included

220-240V AC 50/60HZ	White	PIR motion sensor



Mevo

E27 | motion sensor



Index					EAN CODE
8915	2x E27* (max. 60W)	Steel + PC	IP44	Ø320 x 100 mm	5 904703 016816 >

*not included

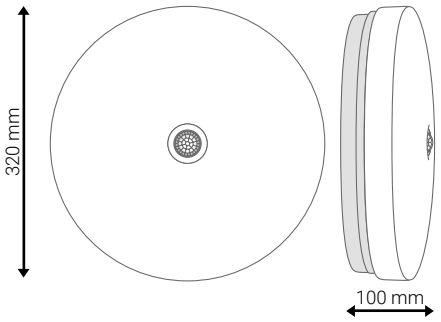



motion sensor | E27



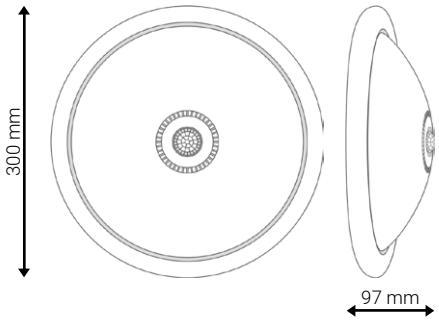

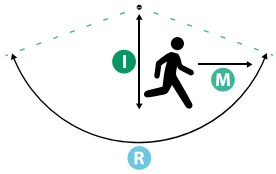

- I Installation height: 2,2-4 m
- M Motion detection: 0,6-1,5 m/s
- R Detection range: 360°

Index								EAN CODE
4982	2x E27* (max. 40W)	Steel + glass	IP20	10s - 15min (choice available)	max. 6 m	<3 -2000 lux (choice available)	Ø300 x 97 mm	5 903002 030202 >
4982-PC	2x E27* (max. 25W)	Metal + PC						5 908263 385726 >

*not included

Plafony
Ceiling lamps
Deckenleuchten
Mennyezeti lámpák

4000K - 4500K	Metal + PC	White	IP20

motion sensor



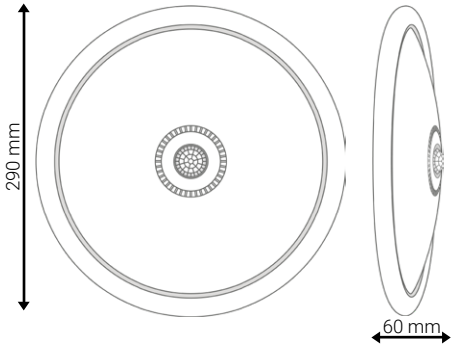

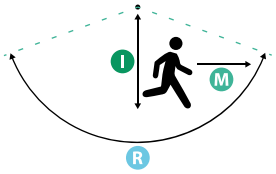

- I Installation height: 2,2-4 m
- M Motion detection: 0,6-1,5 m/s
- R Detection range: 360°

Index									EAN CODE
4983	SMD 2835	220-240V AC 50/60HZ	12W	1160lm	10s (+/-5s) - 6min (+/-2min)	max. 6 m	<3 -2000 lux (regulation)	Ø290 x 60 mm	5 903002 030219 >



SMD	175-265V AC 50/60HZ	Steel + PC	4000K	IP44	160°	White



Kiro LED



Index				EAN CODE
1126	12W	840lm	Ø250 x 50 mm	5 903002 036686 >
1127	18W	1260lm	Ø330 x 50 mm	5 903002 036693 >
7133	24W	1680lm	Ø380 x 50 mm	5 908263 384484 >

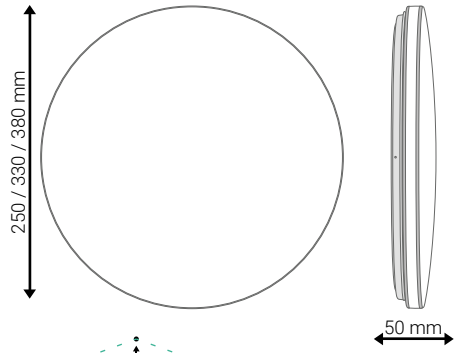

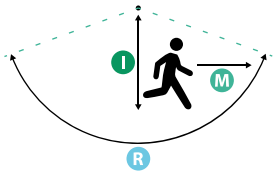

I Installation height: 3-5 m
M Motion detection: 0,3-1 m/s
R Detection range: 120°

Kiro LED motion sensor







Microwave motion sensor with DIP switch

Index							EAN CODE
1568	24W	1680lm	8s / 3min / 8min / 12min (regulation)	max. 8 m	10 /20 / 30 / 2000 lux (regulation)	Ø380 x 50 mm	5 908263 384408 >

SMD	175-265V AC 50/60HZ	Steel + PC	4000K	IP44	160°	White

Erik LED



Index				EAN CODE
5692	12W	840lm	Ø255 x 50 mm	5 903002 035191 >
6108	18W	1260lm	Ø325 x 50 mm	5 903002 035207 >
1445	24W	1680lm	Ø375 x 50 mm	5 903002 035214 >

Erik LED
motion sensor



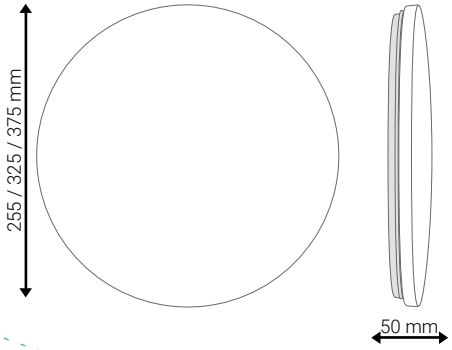

Index							EAN CODE
1286	12W	840lm	30s (+/-5s)	5-8 m	10 lux	Ø255 x 50 mm	5 908263 380622 >
3358	18W	1260lm				Ø325 x 50 mm	5 908263 380639 >

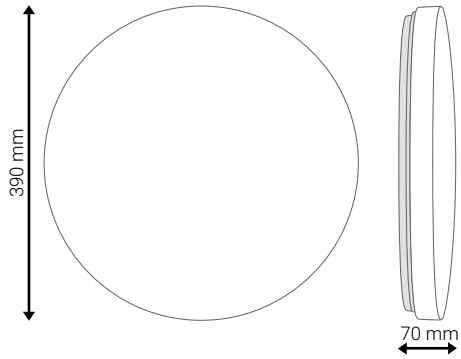

Erik



Index										EAN CODE
8914	SMD 2835	185-265V AC 50/60HZ	max. 72W	max. 5400lm	3000K - 6500K	Steel + PC	IP44	160°	Ø390 x 70 mm	5 904703 016779 >



SMD	220-240V AC 50/60HZ	PC	4000K	IP65 IK10	120°	White

Midas





Index				EAN CODE
6676	22W	2200lm	Ø300 x 40 mm	5 904703 006039 >

Midas

motion sensor





4 adjustable knobs

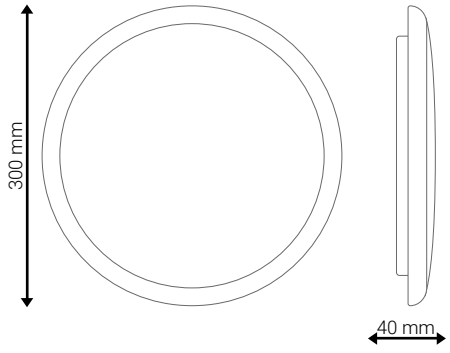

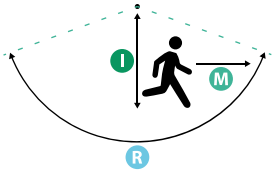

I Installation height: 1,5-3,5 m [wall]; 2-4 m [ceiling]

M Motion detection: 0,6-1,5 m/s

R Detection range: 180° / 360°

Index							EAN CODE
0737	22W	2200lm	10s (+/-3s) - 12min (+/-1s) (regulation)	2m - 8m (ceiling); 5-15m (wall) (regulation)	<3 - 2000 lux (regulation)	Ø300 x 40 mm	5 908263 380455 >

LVT lvt.com.pl
VIP ELECTRO.PL
master LED
XUDO

SMD	220-240V AC 50/60HZ	18W	1750lm	PC	4000K	IP54 IK08	120°	White



Minos



Index		EAN CODE
1622	Ø220 x 51 mm	5 904703 008927 >

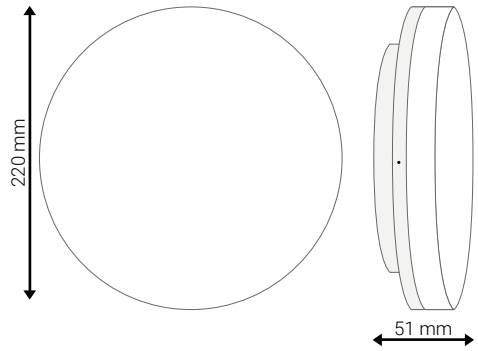

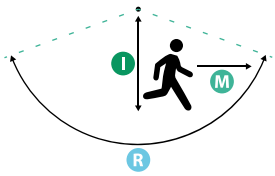

I Installation height: 3-5 m
M Motion detection: 0,3-1 m/s
R Detection range: 120°

Minos

motion sensor



Index					EAN CODE
1624	40s	5-8 m	20 lux	Ø220 x 51 mm	5 904703 008934 >

SMD	220-240V AC 50/60HZ	Steel + PVC	4000K	IP44	120°

Luvo LED

9178
9179
9180



9132
9134
9135



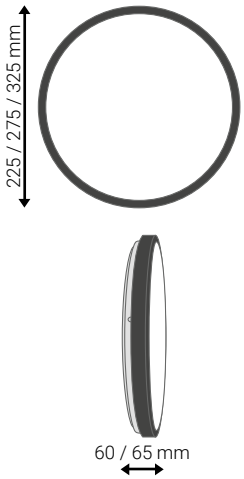



Index					EAN CODE
9178	12W	1200lm	Ø255 x 60 mm	White	5 904703 019428 >
9132				Black	5 904703 019343 >
9179	18W	1800lm	Ø275 x 60 mm	White	5 904703 019435 >
9134				Black	5 904703 019350 >
9180	24W	2400lm	Ø325 x 65 mm	White	5 904703 019442 >
9135				Black	5 904703 019367 >

Luvo LED

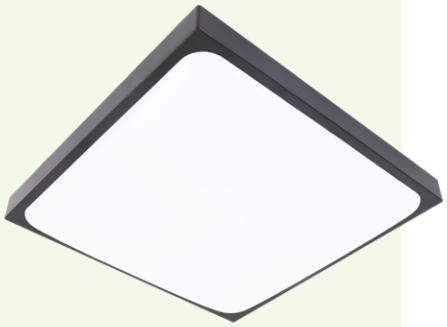



Index					EAN CODE
9138	18W	1800lm	275 x 275 x 60 mm	Black	5 904703 018360 >

SMD	220-240V AC 50/60HZ	Steel + PVC	4000K	IP44	120°



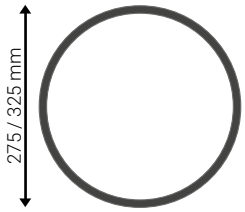



Luvo

motion sensor

9183
DIP 9181
9182
DIP 9184



9136
DIP 9170
9137
DIP 9171

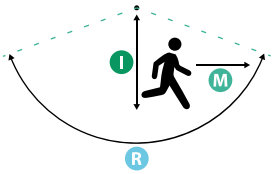

RF microwave motion sensor:
- I Installation height: 1,5-5 m
- M Motion detection: 0,6-1,5 m/s
- R Detection range: ≤360°

DIP microwave motion sensor: 1 2 3 4 5 6
- I Installation height: 3-5 m
- M Motion detection: 0,3-1 m/s
- R Detection range: 100°

Index								EAN CODE
9183	18W	1800lm	Ø275 x 60 mm	30s (+/-5s)	1,5m - 5m (ceiling); 3-8m (wall)	5-30 lux	White	5 904703 019473 >
9136							Black	5 904703 019374 >
9181				5s / 1min / 3min / 10min (regulation)	3m - 5m (ceiling)	5 / 10 / 25 lux (regulation)	White	5 904703 019459 >
9170							Black	5 904703 019398 >
9182	24W	2400lm	Ø325 x 65 mm	30s (+/-5s)	1,5m - 5m (ceiling); 3-8m (wall)	5-30 lux	White	5 904703 019466 >
9137							Black	5 904703 019381 >
9184				5s / 1min / 3min / 10min (regulation)	3m - 5m (ceiling)	5 / 10 / 25 lux (regulation)	White	5 904703 019480 >
9171							Black	5 904703 019404 >

100-265V AC 50/60HZ	2x E27* (max. 60W) *not included	Steel + PC	IP44	Ø305 x 58 mm

Luvo E27


8907


8906



Index		EAN CODE
8907	White	5 904703 017219 >
8906	Black	5 904703 017226 >

Luvo E27
motion sensor


8909


8908


Microwave motion sensor with DIP switch

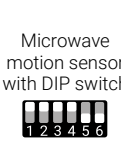

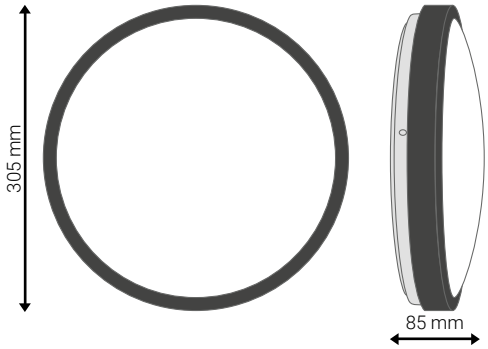

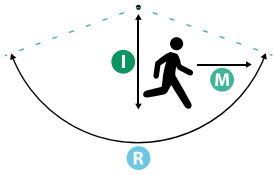

I Installation height: 3-5 m
M Motion detection: 0,3-1 m/s
R Detection range: 120°

Index					EAN CODE
8909	White	5s / 30s / 1min / 3min / 5min / 10min / 20 min / 30min (regulation)	max. 8 m	2 / 10 / 25 / 50 / OFF lux (regulation)	5 904703 017196 >
8908	Black				5 904703 017202 >

100-265V AC 50/60HZ	2x E27* (max. 60W) *not included	Steel + PC	IP44	305 x 305 x 85 mm



Luvo E27



Index		EAN CODE
8903	White	5 904703 017233 >
8902	Black	5 904703 017240 >

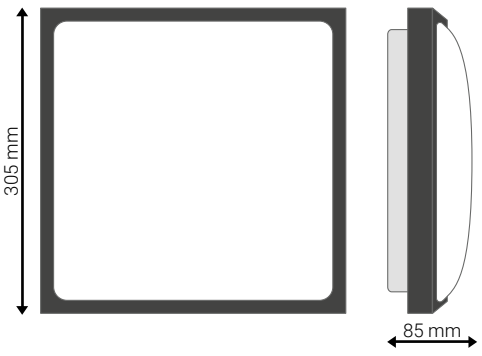

Luvo E27 motion sensor



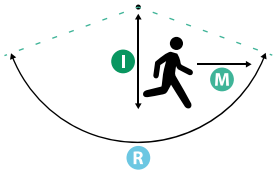

- I Installation height: 3-5 m
- M Motion detection: 0,3-1 m/s
- R Detection range: 120°

Index					EAN CODE
8905	White	5s / 30s / 1min / 3min / 5min / 10min / 20 min / 30min (regulation)	max. 8 m	2 / 10 / 25 / 50 / OFF lux (regulation)	5 904703 017257 >
8904	Black				5 904703 017264 >



Microwave motion sensor with DIP switch



175-265V AC 50/60HZ	2x E27* (max. 40W) *not included	Steel + PC	IP44	Ø330 x 100 mm

Solen E27







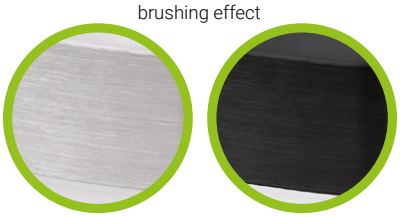

Index		EAN CODE
6568	Black	5 908263 383517 >
1117	Silver	5 903002 035245 >

Solen E27
motion sensor





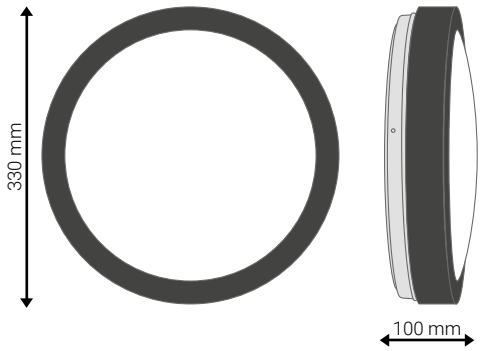

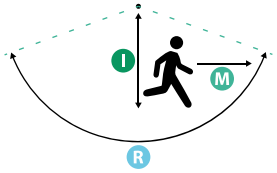

I Installation height: 2-8 m
M Motion detection: 0,3-1 m/s
R Detection range: 120°



Microwave motion sensor with DIP switch

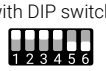

Index					EAN CODE
3452	Black	8s / 3min / 8min / 12min (regulation)	max. 8 m	10 / 20 / 30 / 2000 lux (regulation)	5 904703 000761 >
7332	Silver				5 908263 386556 >

175-265V AC 50/60HZ	2x E27* (max. 40W) *not included	Steel + PC	IP44	270 x 270 x 90 mm



Solen E27

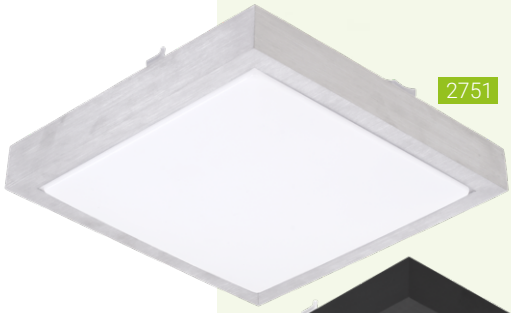

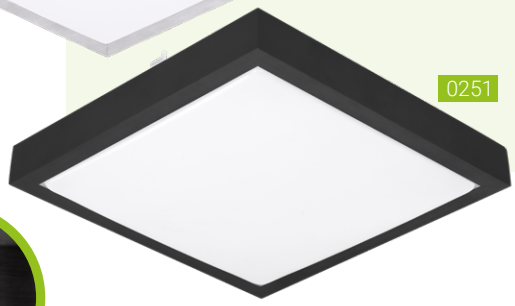

brushing effect



Index		EAN CODE
0251	Black	5 908263 383524 >
2751	Silver	5 903002 035320 >

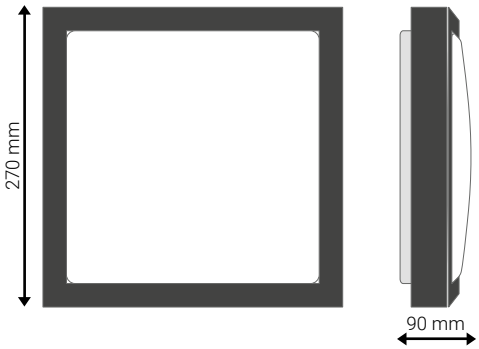

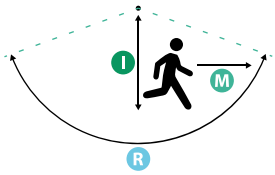

- I Installation height: 2-8 m
- M Motion detection: 0,3-1 m/s
- R Detection range: 120°

Solen E27 motion sensor



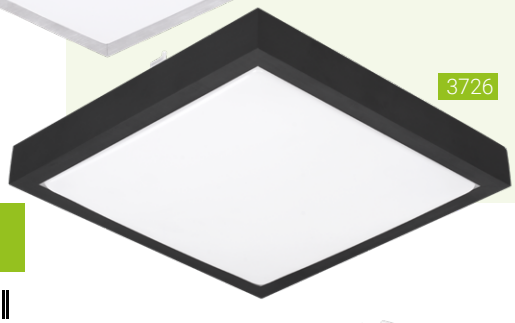

Index					EAN CODE
3726	Black	8s / 3min / 8min / 12min (regulation)	max. 8 m	10 / 20 / 30 / 2000 lux (regulation)	5 904703 000778 >
7331	Silver				5 908263 386549 >

Microwave motion sensor with DIP switch



SMD	175-265V AC 50/60HZ	Steel + PCV	4000K	IP20	160°	Black

Filo LED





Index				EAN CODE
0561	18W	1440lm	Ø270 x 70 mm	5 904703 008675 >
0562	24W	1920lm	Ø340 x 70 mm	5 904703 008682 >
0563	36W	2880lm	Ø390 x 70 mm	5 904703 008699 >

Filo LED

motion sensor

0621 DIP
0566

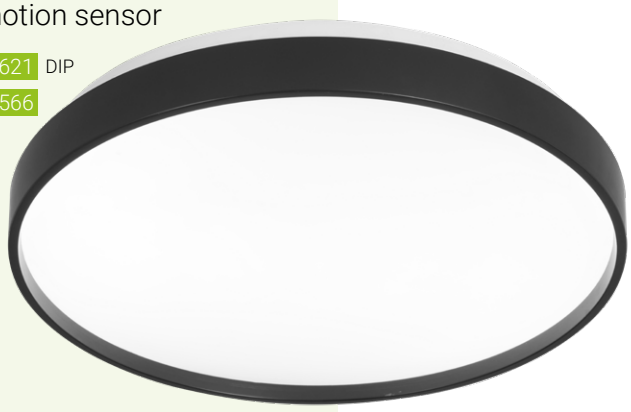

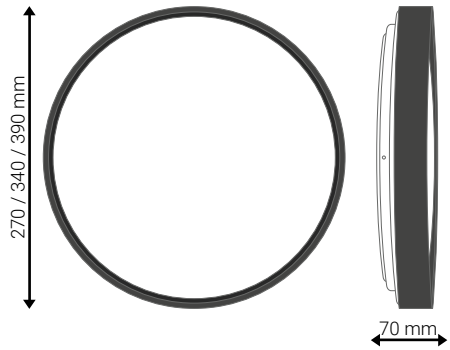

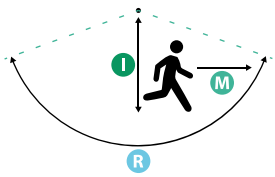

I Installation height: 2-8 m
M Motion detection: 0,3-1 m/s
R Detection range: 120°

Index							EAN CODE
0621	18W	1440lm	40s (+/-5s)	5-8 m	10 lux	Ø340 x 70 mm	5 904703 008736 >
0566			8s - 12min (+/-5s)	max. 8 m	<50 lux		5 904703 008712 >

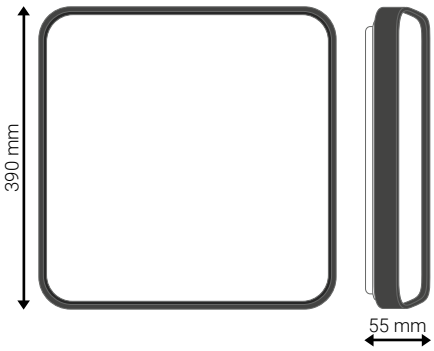

Filo LED



Index											EAN CODE
0564	SMD	220-240V AC 50/60HZ	36W	2880lm	4000K	Steel + PCV	IP20	160°	Black	390 x 390 x 55 mm	5 904703 008705 >



Vesna LED



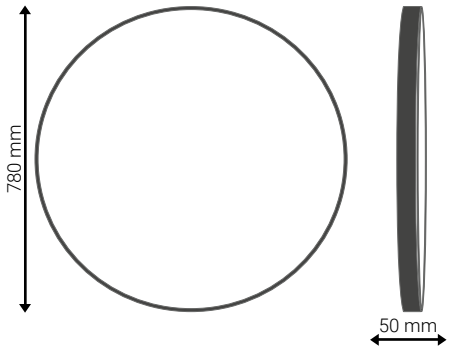

Index											EAN CODE
8735	SMD 2835	165-265V AC 50/60HZ	90W	9000lm	4000K	Steel + PC	IP20	120°	Black	Ø780 x 50 mm	5 904703 015604 >



SMD	175-265V AC 50/60HZ	Steel + PC	4000K	IP44	160°	White

Domin LED

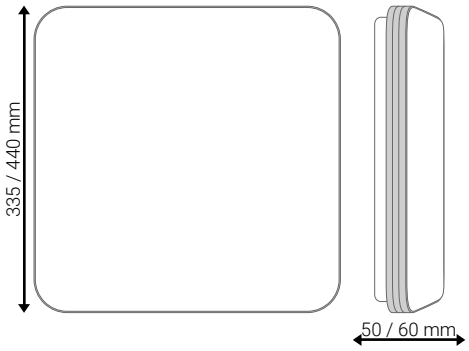



Index				EAN CODE
1450	24W	1680lm	335 x 335 x 50 mm	5 903002 035252 >
3229	30W	2100lm	440 x 440 x 60 mm	5 903002 035269 >



Sand



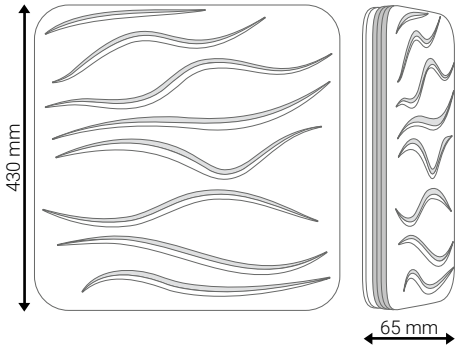

Index											EAN CODE
3234	SMD	175-265V AC 50/60HZ	Steel + PC	3000K - 6500K	max. 72W	max. 5040lm	160°	IR remote control	IP20	430 x 430 x 65 mm	5 908263 384446 >



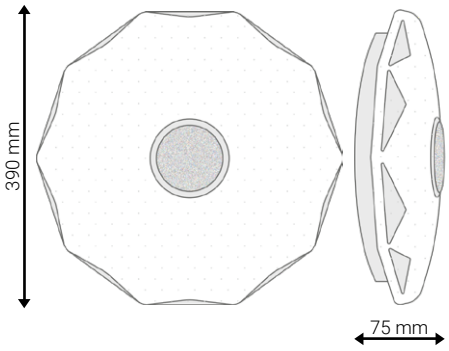

Diami



Index											EAN CODE
1570	SMD	175-265V AC 50/60HZ	Steel + PC	3000K - 6500K	24W	1680lm	160°	IR remote control	IP20	Ø390 x 75 mm	5 908263 384415 >



Santo



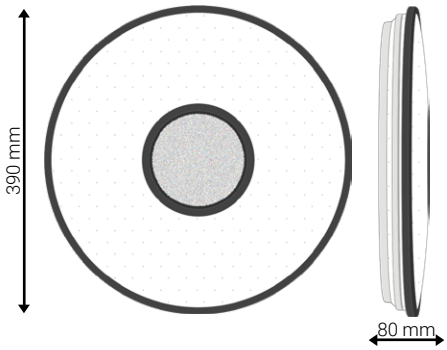

Index											EAN CODE
4043	SMD	175-265V AC 50/60HZ	Steel + PC	3000K - 6500K	24W	1680lm	160°	IR remote control	IP20	Ø390 x 80 mm	5 908263 384453 >



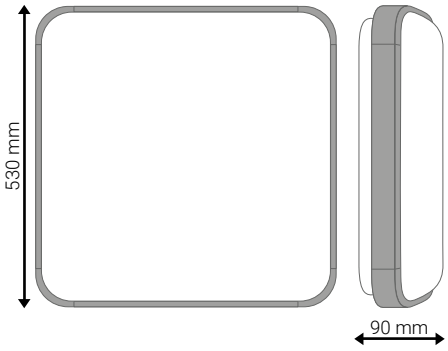

Parys



Index											EAN CODE
2967	SMD	175-265V AC 50/60HZ	Steel + PC	3000K - 6500K	36W	2520lm	160°	RF 2,4G remote control	IP44	530 x 530 x 90 mm	5 903002 036662 >



SMD 2835 + 5050 RGB	175-265V AC 50/60HZ	Steel + PC	RGB+ 3000K - 6500K	IP20	160°	Bluetooth remote control	White

Erik LED RGB CCT



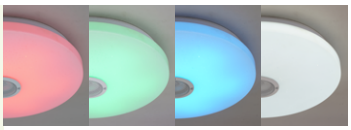

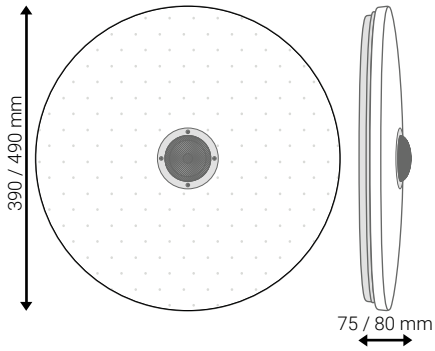







Index				EAN CODE
0214	max. 48W	max. 3600lm	Ø390 x 75 mm	5 904703 002406 >
4049	max. 72W	max. 5400lm	Ø490 x 80 mm	5 904703 002413 >

Nevada LED RGB CCT



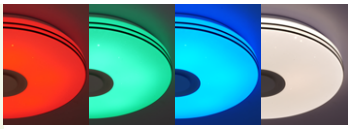

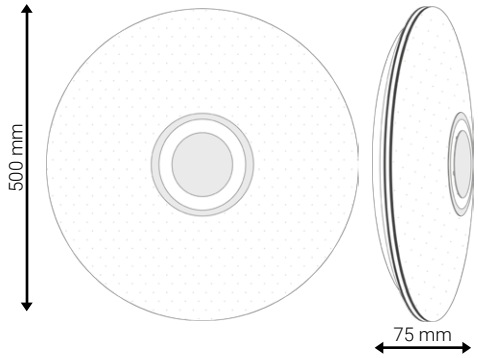







Index				EAN CODE
7569	max. 72W	max. 5400lm	Ø500 x 75 mm	5 908263 389434 >

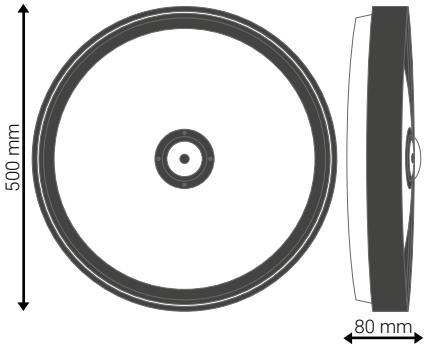

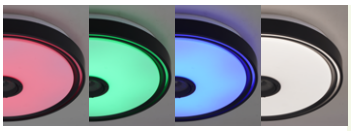

Cosmo



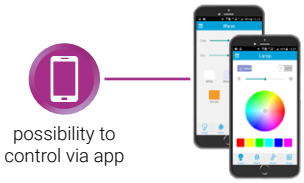

Index											EAN CODE
1277	SMD 2835 + 5050 RGB	175-265V AC 50/60HZ	Steel + PC	RGB+ 3000K - 6500K	max. 72W	max. 5400lm	160°	Blue-tooth remote control	IP20	Ø500 x 80 mm	5 908263 389434 >



SMD 2835 + 5050 RGB	175-265V AC 50/60HZ	Steel + PC	RGB+ 3000K - 6500K	IP20	160°	Bluetooth remote control	White

Porto

LED RGB CCT

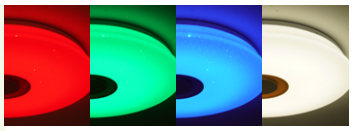



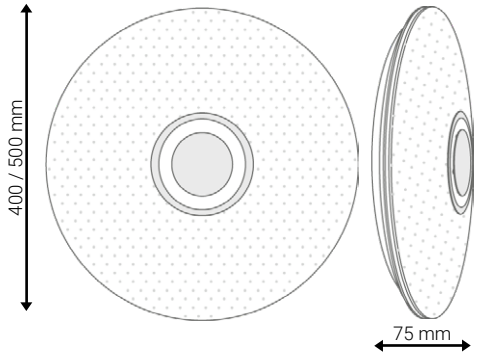

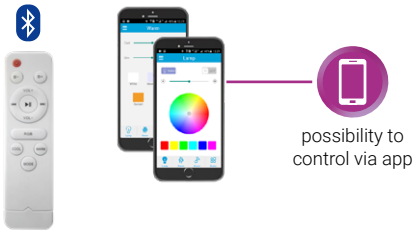

Index				EAN CODE
7941	max. 48W	max. 3600lm	Ø400 x 75 mm	5 904703 002390 >
7234	max. 72W	max. 5400lm	Ø500 x 75 mm	5 908263 385979 >



SMD 2835	220-240V AC 50/60HZ	IP20	IR remote control



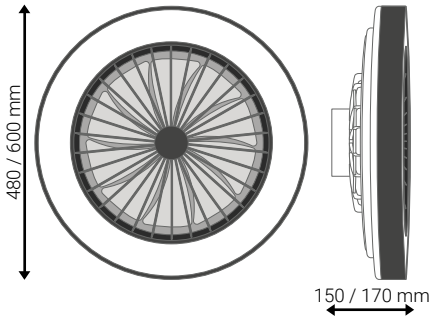

possibility to control via app by indexes: 9285 8618



Kleo

LED CCT DIMM

with build in air fan









airflow regulation

Index								EAN CODE
9285	max. 36W + fan 15W	max. 5040lm	3000K - 6000K	ABS + PP	120°	White	Ø480 x 150 mm	5 904703 019145 >
8618						Black	Ø480 x 150 mm	5 904703 013457 >
8608	40W + fan 15W	2520lm	3000K - 5500K	Steel + PP + PC + MS	150°	Black	Ø600 x 170 mm	5 904703 013051 >



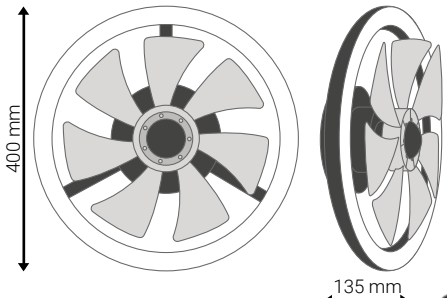

possibility to control via app



Flip

LED CCT DIMM

with build in air fan

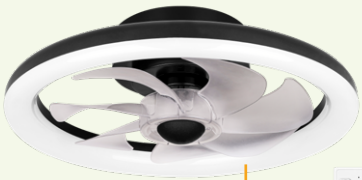



airflow regulation

Index								EAN CODE
9287	max. 36W + fan 15W	max. 5040lm	3000K - 6000K	ABS + PP	120°	Black	Ø400 x 135 mm	5 904703 019138 >

SMD 2835	220-240V AC 50/60Hz	Aluminium + PC	4000K	IP20	110°

LED ceiling modules

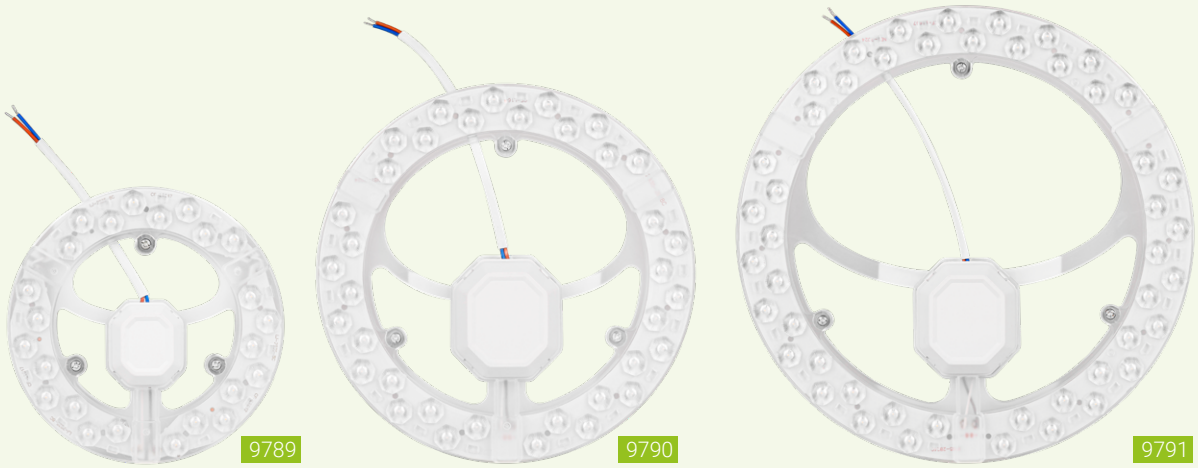



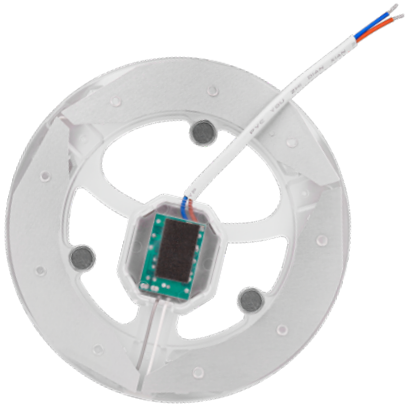

Index				EAN CODE
9789	24W	2400lm	Ø145 x 25 mm	5 904703 022756 >
9790	36W	3600lm	Ø195 x 25 mm	5 904703 022763 >
9791	48W	4800lm	Ø250 x 25 mm	5 904703 022770 >



SMD 2835	220-240V AC 50/60Hz	PP	IP20	120°	White

Bingo LED



change in light colour (CCT) by indexes:
8865 8866



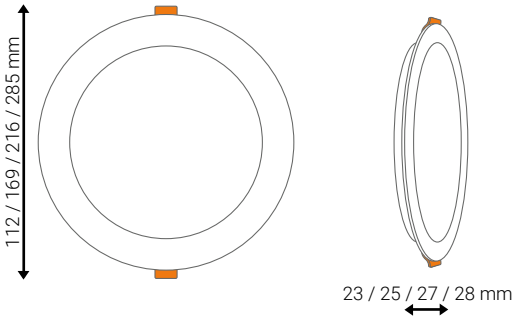

Index						EAN CODE
8856	6W	480lm	4000K	Ø112 x 23 mm	Ø90-110 mm	5 904703 016786 >
8865	12W	960lm	2700K / 4000K / 6500K	Ø169 x 25 mm	Ø145-155 mm	5 904703 016878 >
8857			4000K			5 904703 016793 >
8866	18W	1440lm	2700K / 4000K / 6500K	Ø216 x 27 mm	Ø180-200 mm	5 904703 016885 >
8858			4000K			5 904703 016809 >
8859	24W	1920lm	4000K	Ø285 x 28 mm	Ø240-255 mm	5 904703 016823 >

SMD 2835	220-240V AC 50/60Hz	PP	IP20	120°	White



Bingo LED

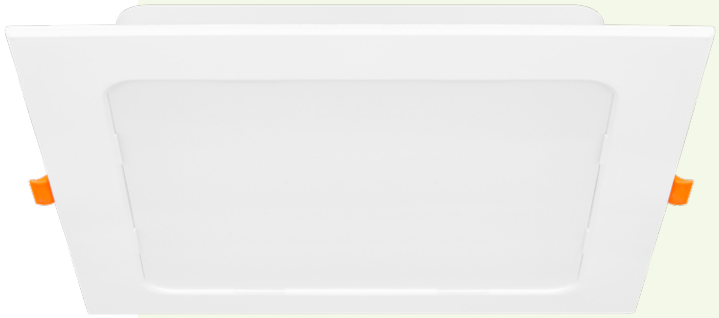

change in light colour (CCT) by indexes:
8867 8868

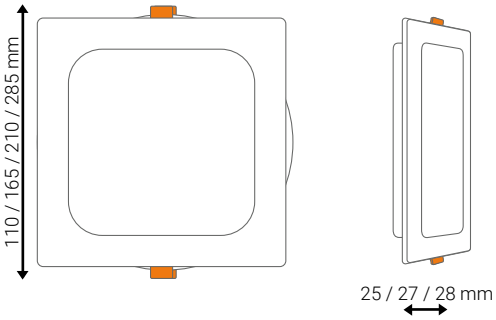

Index						EAN CODE
8860	6W	480lm	4000K	110 x 110 x 25 mm	90-100 mm	5 904703 016830 >
8867	12W	960lm	2700K / 4000K / 6500K	165 x 165 x 27 mm	145-155 mm	5 904703 016892 >
8861			4000K			5 904703 016847 >
8868	18W	1440lm	2700K / 4000K / 6500K	210 x 210 x 28 mm	185-200 mm	5 904703 016908 >
8862			4000K			5 904703 016854 >
8863	24W	1920lm	4000K	285 x 285 x 28 mm	240-255 mm	5 904703 016861 >

SMD 2835	220-240V AC 50/60Hz	PP	IP20	120°

Bingo LED



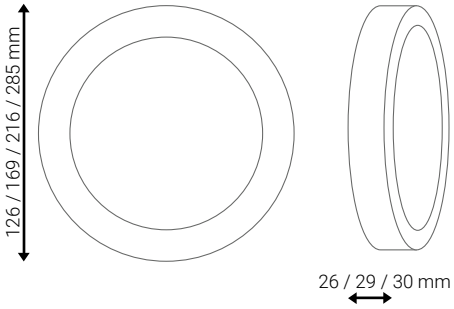

change in light colour (CCT) by indexes:
8869 8895 8870
8896 8871 8898

Index						EAN CODE
8878	6W	480lm	4000K	Ø126 x 26 mm	White	5 904703 016977 >
8869	12W	960lm	2700K / 4000K / 6500K (DIP switch)	Ø169 x 29 mm	White	5 904703 016915 >
8895					Black	5 904703 017134 >
8881			4000K		White	5 904703 016984 >
8884					Black	5 904703 017011 >
8870	18W	1440lm	2700K / 4000K / 6500K (DIP switch)	Ø216 x 30 mm	White	5 904703 016922 >
8896					Black	5 904703 017141 >
8882			4000K		White	5 904703 016991 >
8885					Black	5 904703 017028 >
8871	24W	1920lm	2700K / 4000K / 6500K (DIP switch)	Ø285 x 30 mm	White	5 904703 016939 >
8898					Black	5 904703 017158 >
8883			4000K		White	5 904703 017004 >
8887					Black	5 904703 017042 >



SMD 2835	220-240V AC 50/60Hz	PP	IP20	120°

Bingo LED



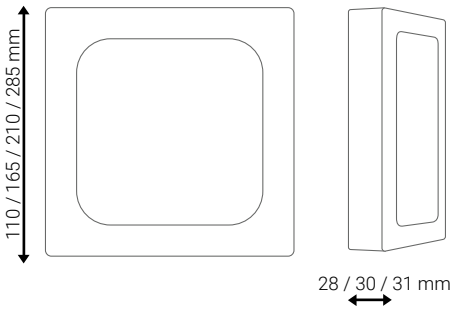

change in light colour (CCT) by indexes:
8874 8899 8876
8900 8877 8901

Index						EAN CODE
8886	6W	480lm	4000K	110 x 110 x 28 mm	White	5 904703 017035 >
8874	12W	960lm	2700K / 4000K / 6500K (DIP switch)	165 x 165 x 30 mm	White	5 904703 016946 >
8899					Black	5 904703 017165 >
8888			4000K		White	5 904703 017059 >
8892					Black	5 904703 017103 >
8876	18W	1440lm	2700K / 4000K / 6500K (DIP switch)	210 x 210 x 31 mm	White	5 904703 016953 >
8900					Black	5 904703 017172 >
8890			4000K		White	5 904703 017073 >
8893					Black	5 904703 017110 >
8877	24W	1920lm	2700K / 4000K / 6500K (DIP switch)	285 x 285 x 31 mm	White	5 904703 016960 >
8901					Black	5 904703 017189 >
8891			4000K		White	5 904703 017097 >
8894					Black	5 904703 017127 >

SMD 2835	176-264V AC 50/60Hz	4000K	PC	IP54	120°



Maks LED



Index					EAN CODE
1477	12W	1050lm	Ø155 x 51 mm	White	5 908263 381551 >
1002				Black	5 904703 002307 >
1479	18W	1650lm	Ø210 x 51 mm	White	5 908263 381568 >
1146				Black	5 904703 002321 >

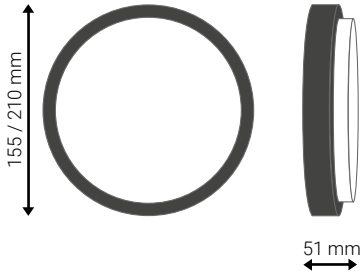

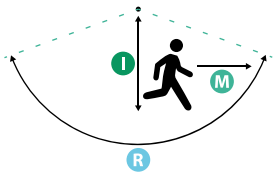

I Installation height: 3-4 m
M Motion detection: 0,3-1 m/s
R Detection range: 120°

Maks LED motion sensor



Index								EAN CODE
5910	12W	1050lm	Ø155 x 51 mm	White	20s	6-7 m	20 lux	5 903002 033272 >
1185				Black				5 904703 002314 >
8437	18W	1650lm	Ø210 x 51 mm	White				5 904703 007814 >
0866				Black				5 904703 005971 >

Kinkiety nad lustro
Ceiling lamp above the mirror
Wandlampen über dem Spiegel
Fali lámpák a tükör felett

SMD 2835	220-240V AC 50/60HZ	4000K

Santo LED



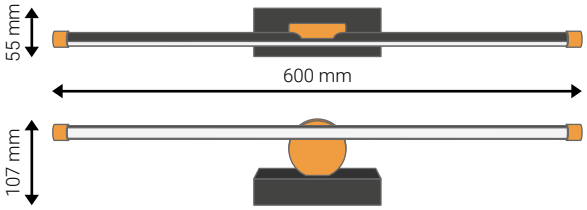



Index								EAN CODE
5797	12W	1440lm	Aluminium + iron	Black	IP44	140°	600 x 55 x 107 mm	5 904703 013549 >

Mila LED

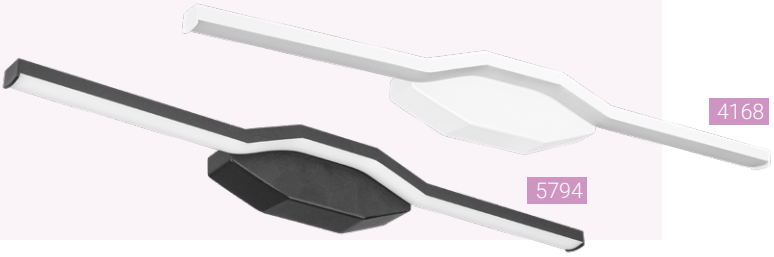

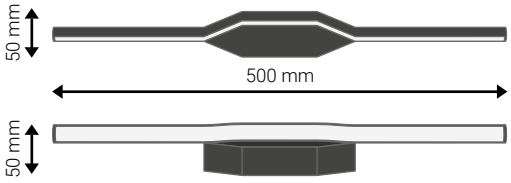



Index								EAN CODE
4168	10W	1340lm	Aluminium + PC + iron	White	IP20	110°	500 x 50 x 50 mm	5 904703 013525 >
5794				Black				5 904703 013532 >

Kinkiety nad lustro
Ceiling lamp above the mirror
Wandlampen über dem Spiegel
Fali lámpák a tükör felett

SMD 2835	220-240V AC 50/60HZ	4000K	PC + aluminium + steel	Black	IP20	116°







Lappa

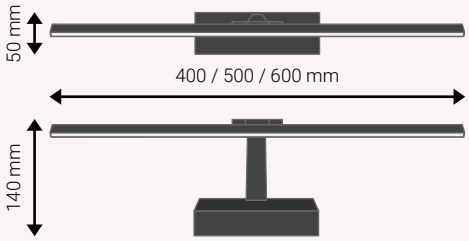

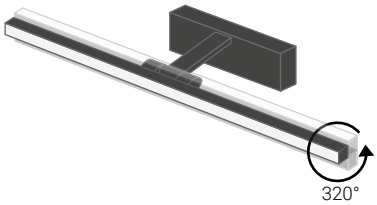

Index				EAN CODE
1657	9W	450lm	400 x 140 x 50 mm	5 904703 008576 >
1701	12W	600lm	500 x 140 x 50 mm	5 904703 008606 >
1705	14W	700lm	600 x 140 x 50 mm	5 904703 008620 >



Kinkiety nad lustro
Ceiling lamp above the mirror
Wandlampen über dem Spiegel
Fali lámpák a tükör felett

SMD 2835	220-240V AC 50/60HZ	4000K	Aluminium + PC + iron	Black + gold	IP20	160°

Gemino LED

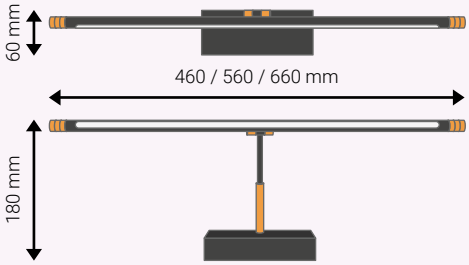



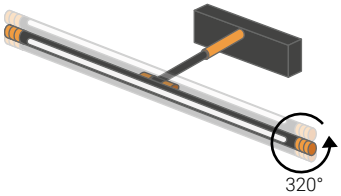

Index				EAN CODE
2937	9W	990lm	460 x 60 x 180 mm	5 904703 013495 >
0553	12W	1440lm	560 x 60 x 180 mm	5 904703 013501 >
4167	14W	1680lm	660 x 60 x 180 mm	5 904703 013518 >



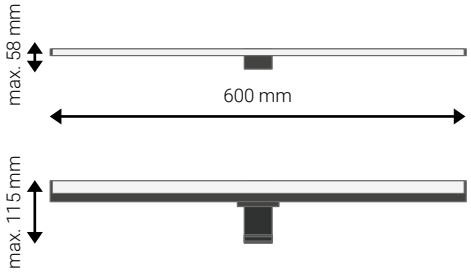

Sinio LED



3 installation methods:

- on a mirror  40 x 70 x 35 mm
- on a surface (e.g. furniture)  80 x 70 x 39 mm
- on a wall (surface-mounted)  40 x 80 x 58 mm

Index										EAN CODE
1720	SMD 2835	220-240V AC 50/60HZ	8W	600lm	4000K	ABS + PC	IP44	175°	600 x 10 x 35 mm	5 904703 008569 >



Kinkiety nad lustro
Ceiling lamp above the mirror
Wandlampen über dem Spiegel
Fali lámpák a tükör felett

SMD 2835	220-240V AC 50/60HZ	4000K	Aluminium + PC + ABS	Black	IP44	110°

Besta LED





2468



1864



4037

3 installation methods:
- on a mirror (without base)
- on a surface (e.g. furniture)
- on a wall (surface-mounted)

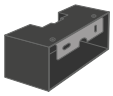

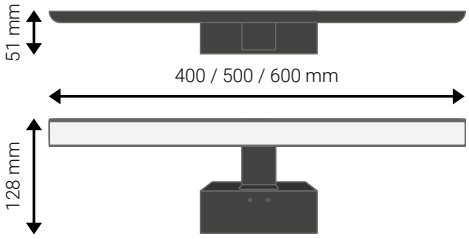

Index				EAN CODE
2468	8W	560lm	400 x 128 x 51 mm	5 904703 005995 >
1864	12W	840lm	500 x 128 x 51 mm	5 904703 006008 >
4037	15W	1050lm	600 x 128 x 51 mm	5 904703 006015 >





Lampy podłogowe LED
LED Floor lamps
LED-Stehlampen
LED állólámpák

IP20

RGB

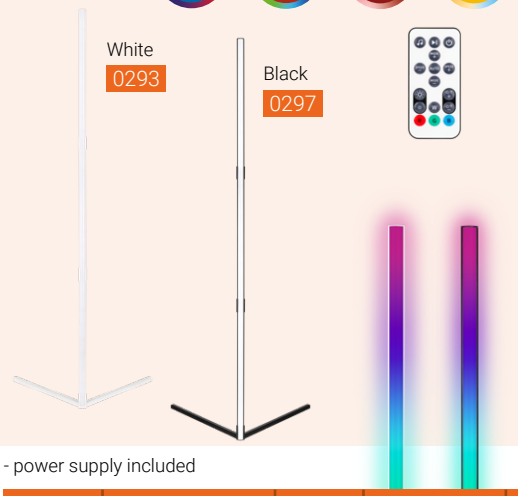

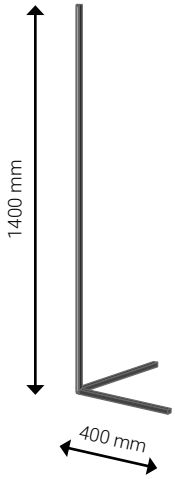



- power supply included

Index								EAN CODE
0293	220-240V AC 50/60Hz	9W	SMD 5050 RGB IC + LED SMD 2835 CCT	max. 350lm	RGB IC + CCT	400 x 400 x 1400 mm Cable length: 1,5 m	Aluminum + steel + PC	5 908263 389564 >
0297								5 908263 389571 >

Meso

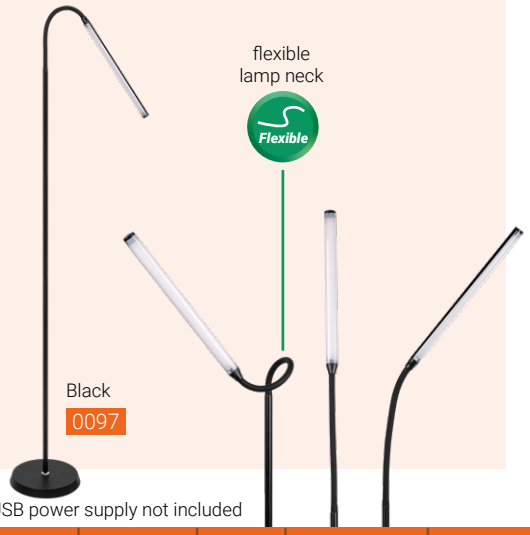

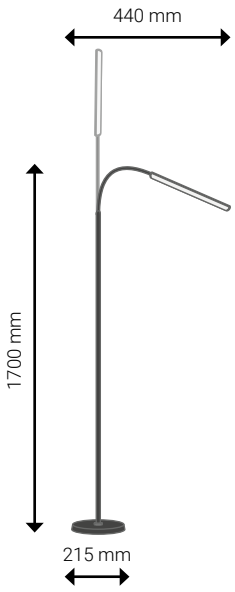



- USB power supply not included

Index								EAN CODE
0097	5V 2A	8W	SMD 2835	300lm	2700K / 4000K / 6500K	440 x 215 x 1700 mm Cable length: 1,45 m	Aluminum + steel + PC	5 904703 017318 >

110-240V AC 50/60Hz	IP20



Ganto

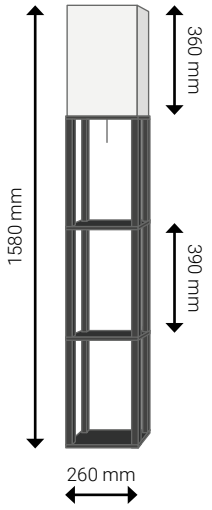



Index					EAN CODE
9217	1x E27 (max. 60W)* *not included	260 x 260 x 1580 mm Cable length: 3 m	Wood + fabric	White + rattan	5 904703 018438 >
9218				Wood + rattan	5 904703 018445 >
0209				Black + rattan	5 904703 017288 >



Passo

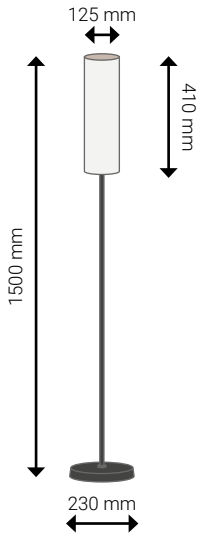

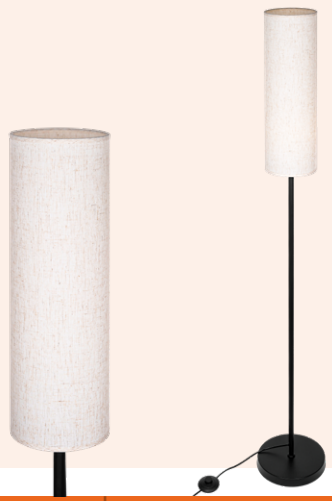

Index					EAN CODE
0094	1x E27 (max. 60W)* *not included	Ø230 x 1500 mm Cable length: 1,8 m	Steel + fabric	Black + rattan	5 904703 017295 >

Lampy podłogowe LED
LED Floor lamps
LED-Stehlampen
LED állólámpák

110-240V
AC 50/60Hz

IP20

Koko LED E27



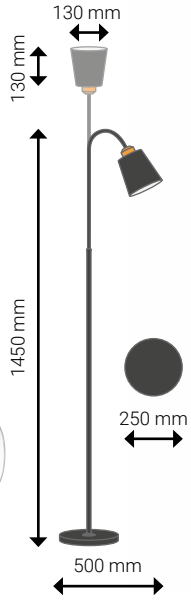



Index					EAN CODE
0117	1x E27 (max. 60W)* *not included	250 x 500 x 1450 mm Cable length: 1,8 m	Steel	Black + Gold	5 904703 017332 >

Koko LED E27



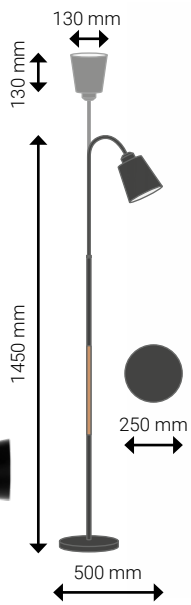



Index					EAN CODE
9770	1x E27 (max. 60W)* *not included	250 x 500 x 1450 mm Cable length: 1,8 m	Steel + wood	White + wood	5 904703 022657 >
9771				Black + wood	5 904703 022664 >

110-240V AC 50/60Hz	IP20



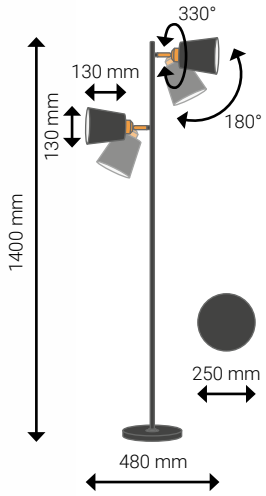

Koko

LED E27



Index					EAN CODE
0086	2x E27 (max. 60W)* *not included	480 x 250 x 1400 mm Cable length: 1,4 m	Steel	Black + gold	5 904703 017325 >



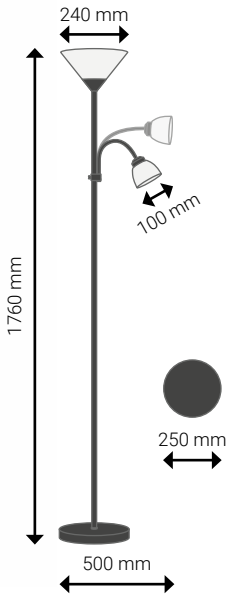

Duos

LED E27 E14



Index					EAN CODE
9772	1x E27 1x E14 (max. 60W)* *not included	500 x 240 x 1760 mm Cable length: 1,5 m	Steel	Black	5 904703 022671 >

Lampy podłogowe LED
LED Floor lamps
LED-Stehlampen
LED állólámpák

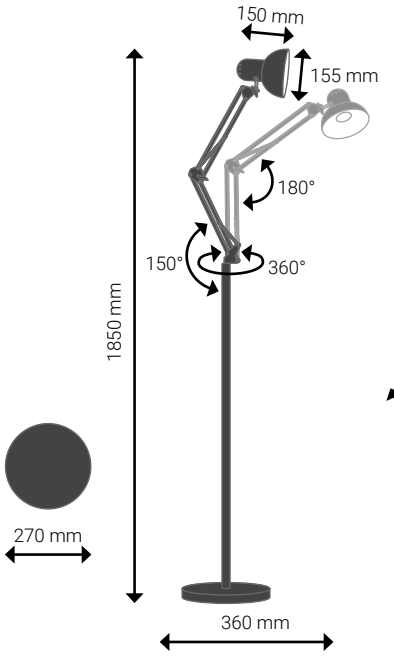

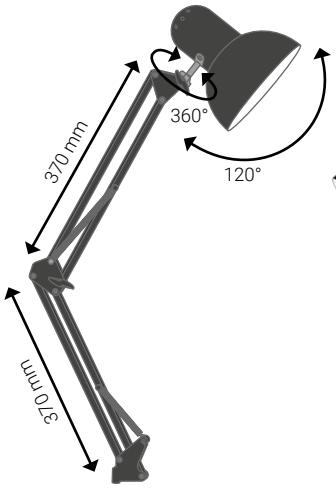

Lena



Index							EAN CODE
0111	110-240V AC 50/60Hz	1x E27 (max. 60W)* *not included	IP20	360 x 270 x 1850 mm Cable length: 1,4 m	Steel	Black	5 904703 017301 >





Lampy biurkowe LED
LED desk lamp
LED-Schreibtischlampen
LED asztali lámpák

IP20

Lena LED E27



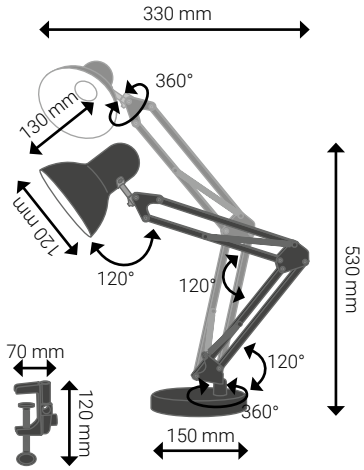



Index						EAN CODE
8340	200 - 240V AC 50/60 Hz	1x E27 (max. 60W)* *not included	330 x 150 x 530 mm Cable length: 1,1 m	Aluminum + steel	White	5 904703 012917 >
1087					Black	5 908263 384309 >

Aleda LED CCT DIMM

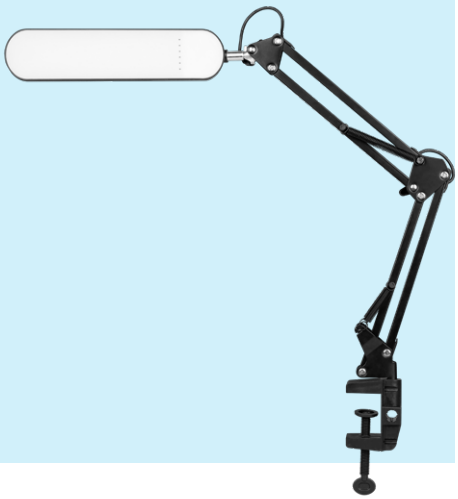

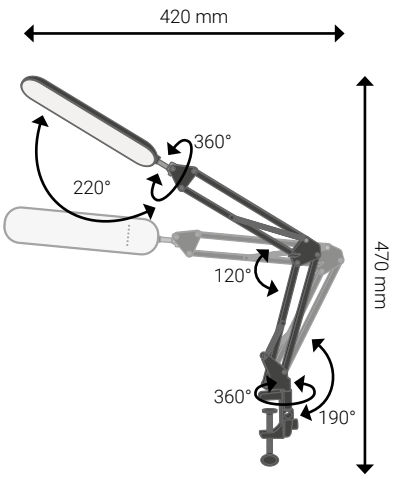



Index									EAN CODE
0531	12V 2A	7W	SMD 2835	560lm	3000K / 4000K / 6000K	420 x 60 x 470 mm Cable length: 1,5 m	Aluminum	Black	5 904703 009559 >



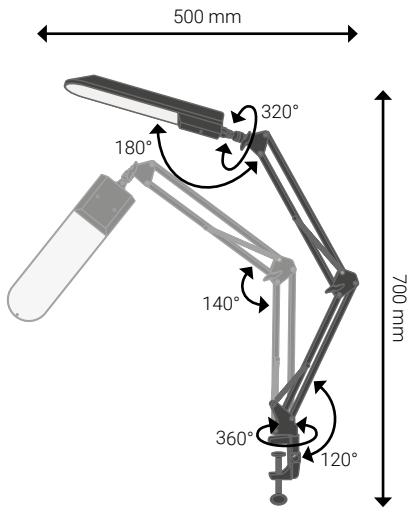

Alina



Index									EAN CODE
1585	220 - 240V AC 50/60 Hz	7W	SMD 2835	480lm	4500K	500 x 80 x 700 mm Cable length: 1,3 m	Metal + ABS	Black	5 908263 383838 >



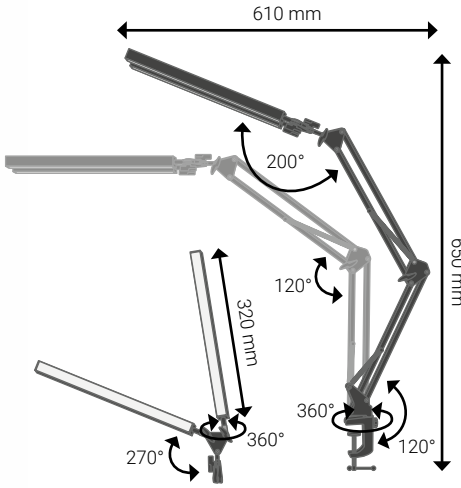

Polino



Index									EAN CODE
0532	5V 3A	14W	SMD 2835	980lm	3000K / 4000K / 6000K	610 x 430 x 650 mm Cable length: 1,1 m	Aluminum	Black	5 904703 009757 >

Lampy biurkowe LED
LED desk lamp
LED-Schreibtischlampen
LED asztali lámpák

1x E27 (max. 60W)* *not included	Steel + Wood	IP20

Kasio LED E27



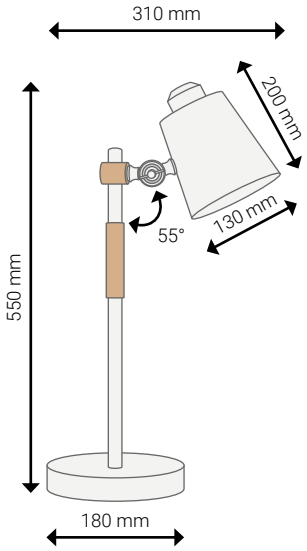



Index				EAN CODE
9773	110-240V AC 50/60 Hz	220 x 180 x 550 mm Cable length: 1,1 m	White + wood	5 904703 022688 >

Woody LED E27



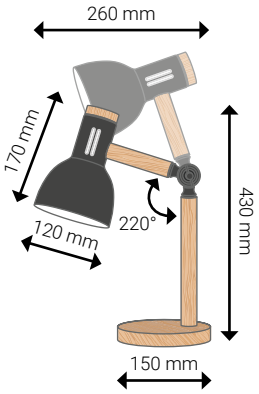



Index				EAN CODE
0091	200-240V AC 50/60 Hz	260 x 150 x 430 mm Cable length: 1,5 m	Black + wood	5 904703 017387 >

ABS	IP20



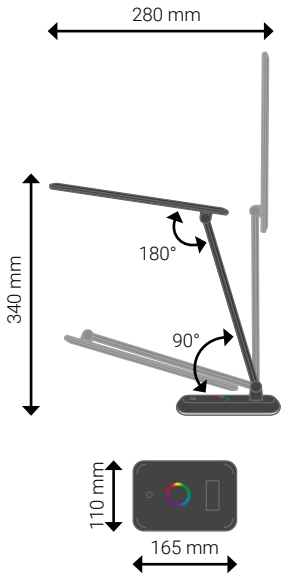

Alma



Index								EAN CODE
0519	5V 1A	12W	SMD 2835	960lm	3000K / 4000K / 6500K + RGB	280 x 110 x 340 mm Cable length: 1,5 m	White	5 904703 009542 >
0338							Black	5 904703 009535 >



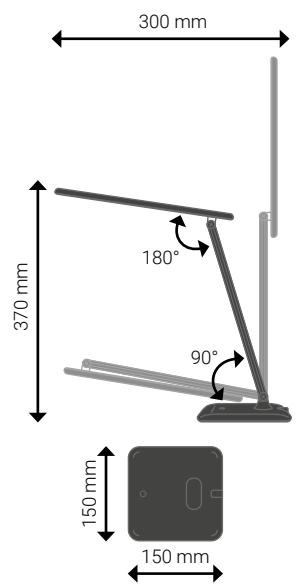

Marina



Index								EAN CODE
8308	12V 1,5A	9W	LED SMD	450lm	4500K	300 x 150 x 370 mm Cable length: 1,5 m	White	5 904703 006275 >
6687							Black	5 904703 006268 >

Lampy biurkowe LED
LED desk lamp
LED-Schreibtischlampen
LED asztali lámpák

SMD 2835	IP20

Kivo



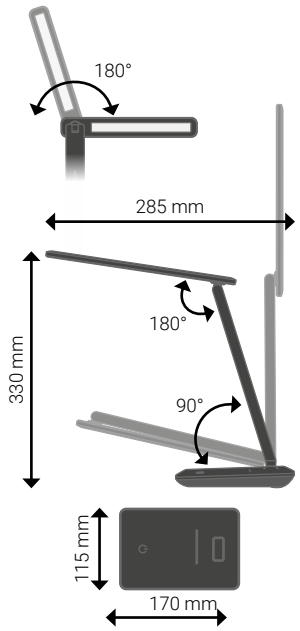



Index								EAN CODE
0316	5V 1A	5W	400lm	3000K / 4000K / 6500K	285 x 115 x 330 mm Cable length: 1,5 m	ABS	White	5 904703 009528 >
0314							Black	5 904703 009504 >

Ingrid



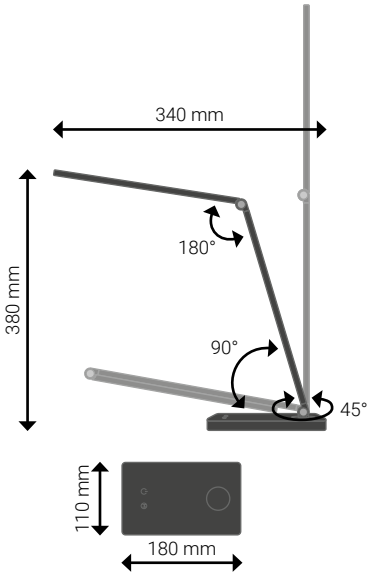



Index									EAN CODE
3609	5V 1A	7W	420lm	2700K / 4000K / 4500K /5000K / 6000K	340 x 110 x 380 mm Cable length: 1,5 m	ABS + metal	–	Black	5 908263 383852 >
1461	5V 3A						QI charging		5 908263 383845 >

LVT lvt.com.pl VIP ELECTRO.PL master LED XUDO

5W	SMD 2835	IP20

Lampy biurkowe LED
LED desk lamp
LED-Schreibtischlampen
LED asztali lámpák



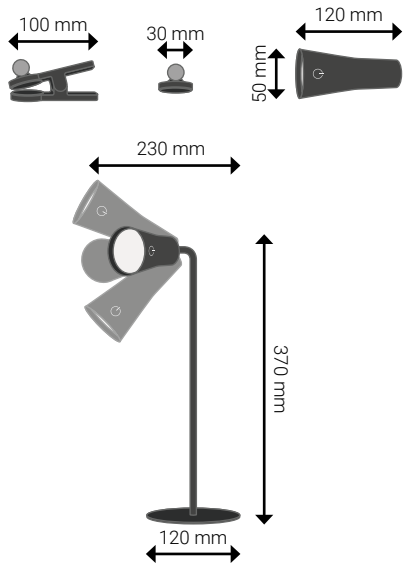

Magneto



Index							EAN CODE
0534	5V 1A	400lm	4000K	230 x 120 x 370 mm Cable length: 1,5 m	Aluminum	White	5 904703 009719 >
0533						Black	5 904703 009566 >



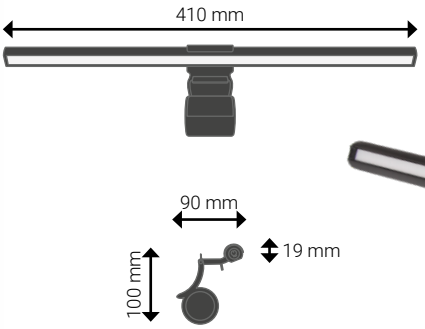

Monitor lamp



Index								EAN CODE
2532	DC 5V	180lm	2700K - 6500K	410 x 90 x 100 mm Cable length: 1,5 m	Ø19 mm	Aluminum + ABS + PC	Black	5 904703 011958 >

Lampy biurkowe LED
LED desk lamp
LED-Schreibtischlampen
LED asztali lámpák

5V 1A	7W	SMD 2835	796lm	3000K / 4000K / 6000K	280 x 180 x 340 mm Cable length: 1 m	ABS	IP54

Summer



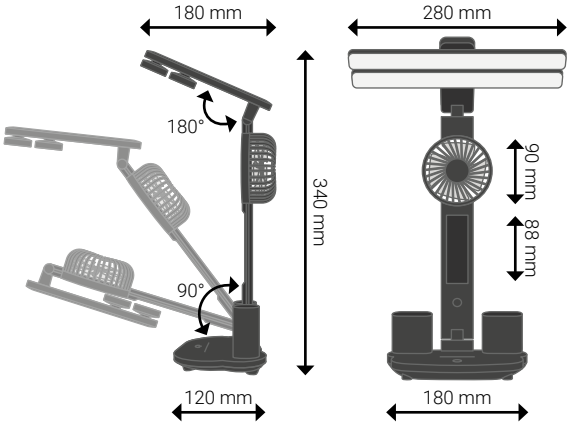

Index		EAN CODE
8872	White	5 904703 016755 >
8875	Black	5 904703 016762 >



1x E27 (max. 60W)* *not included	IP20



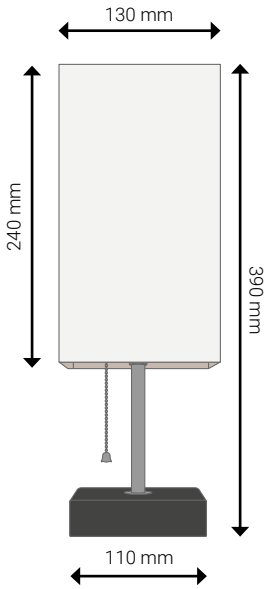

Boro



Index						EAN CODE
0103	220-240V AC 50/60 Hz	130 x 130 x 390 mm Cable length: 1,6 m	1x USB-A 1x USB-C 5V 1A	Steel + fabric	Black + chrome	5 904703 017356 >



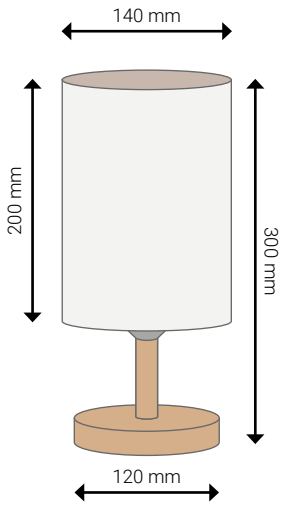

Hildi



Index					EAN CODE
9774	110-240V AC 50/60 Hz	Ø140 x 300 mm Cable length: 1,1 m	Wood + fabric	White + wood	5 904703 022695 >

Lampy biurkowe LED
LED desk lamp
LED-Schreibtischlampen
LED asztali lámpák

3,7V	LED	1,1W	185lm	2800K / 4000K / 6000K	USB-C	Acrylic + steel	Gold	IP20

Riti

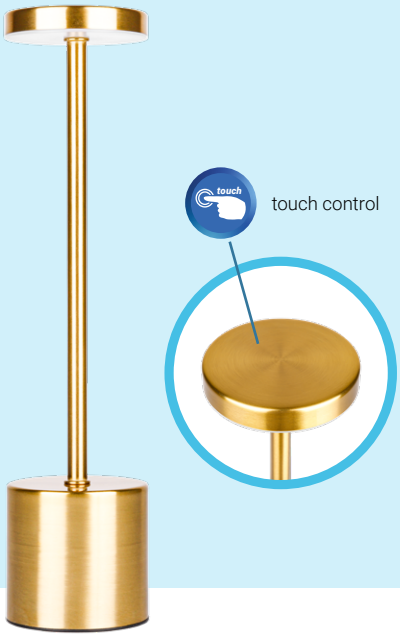

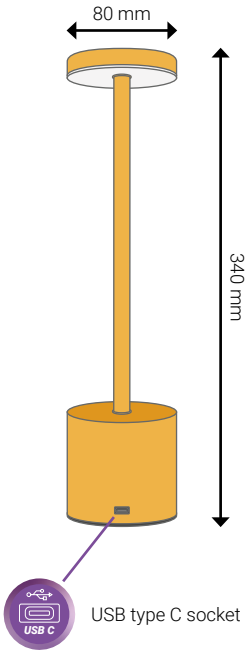



Index		EAN CODE
9546	Ø80 x 340 mm Cable length: 0,8 m	5 904703 021100 >

Zulu



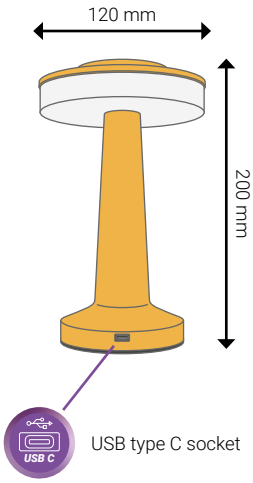



Index		EAN CODE
9547	Ø122 x 200 mm Cable length: 0,8 m	5 904703 021117 >







Index									EAN CODE
0039	5V 2A	SMD 2835	170-200lm	4000K	Ø110 x 375 mm Cable length: 0,8 m	Aluminum	IP20	White	5 904703 015543 >
0037								Black	5 904703 015536 >
0040								Gold	5 904703 015550 >



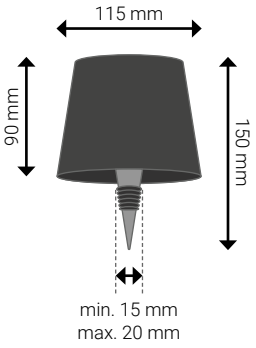



*bottle not included

Index									EAN CODE
2659	5V 1A	LED	200lm	3000K / 4000K / 5000K	Ø115 x 150 mm Cable length: 1,5 m	ABS	IP44	Anthracite	5 904703 011781 >

Lampy biurkowe LED
LED desk lamp
LED-Schreibtischlampen
LED asztali lámpák

5V 2A	5W	420lm	SMD LED	RGB IC	ABS	White	IP20

G 155mm LED RGB

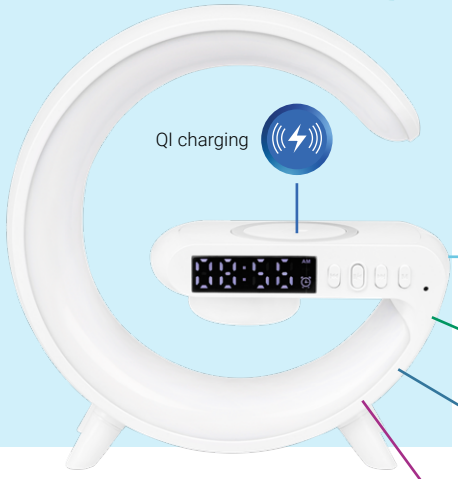

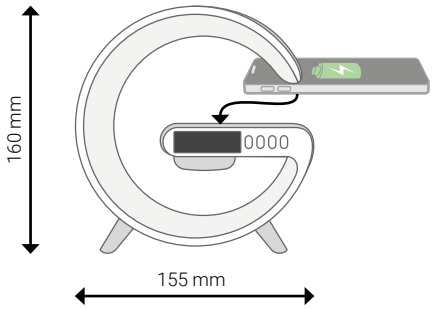

MP3 file support

bluetooth speaker

micro SD, bluetooth

clock with alarm function



Index		EAN CODE
8978	155 x 55 x 160 mm Cable length: 1 m	5 904703 017622 >

G 235mm LED RGB

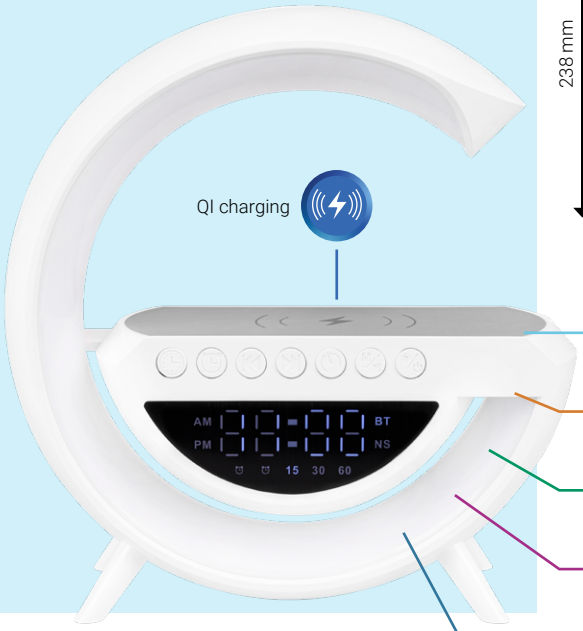

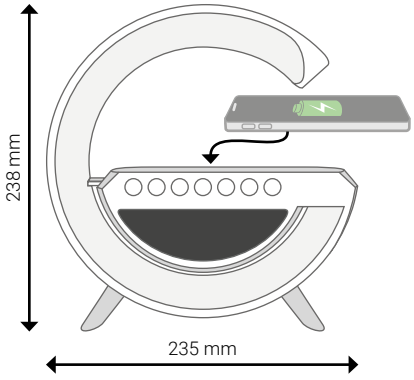

MP3 file support

FM radio player

bluetooth speaker

clock with alarm function

USB A, micro SD, bluetooth



Index		EAN CODE
8977	235 x 80 x 238 mm Cable length: 1 m	5 904703 017615 >


AM
PM
10:19
10 19 80 50
BT
NS

Lampy LED akumulatorowe
Rechargeable LED lamps
Wiederaufladbare LED-Lampen
Újratölthető LED lámpák

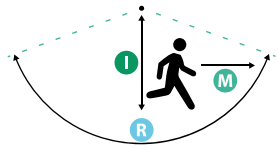

I Installation height: max. 4-6 m
M Motion detection: 2m/s
R Detection range: ≤120°

LED	20s	4-6 m	35-40lux	IP20

Lima LED



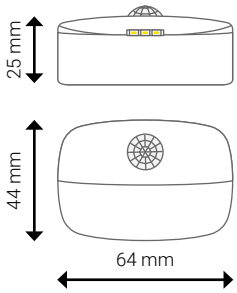

PIR
motion sensor



Index								EAN CODE
9526	3x AAA *not included	0,6W	50lm	4000K	90°	64 x 25 x 44 mm	ABS	5 904703 021032 >

Poli LED CCT DIMM



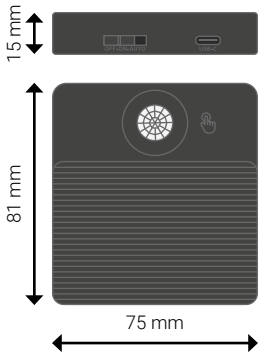

PIR
motion sensor



Index								EAN CODE
9527	5V DC	0,6W	85lm	3000K/ 4000K/ 6500K	90°	75 x 15 x 81 mm Cable length: 500 mm	ABS+PC	5 904703 021049 >

LVT lvt.com.pl VIP ELECTRO.PL master LED XUDO

Lampy LED akumulatorowe
Rechargeable LED lamps
Wiederaufladbare LED-Lampen
Újratölthető LED lámpák

LED	20s	4-6 m	35-40lux	IP20

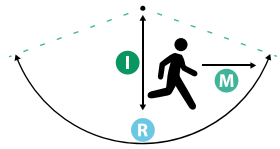

I Installation height: max. 4-6 m
M Motion detection: <2m/s
R Detection range: ≤120°



Wolf

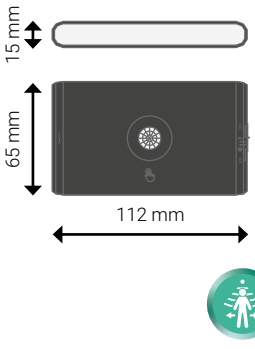

PIR motion sensor



Index								EAN CODE
9528	5V DC	1W	170lm	3000K/ 4000K/ 6500K	180°	112 x 15 x 65 mm Cable length: 500 mm	ABS+PC	5 904703 021056 >



Turo

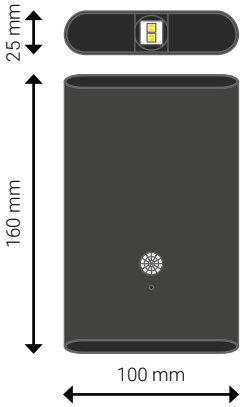

PIR motion sensor



Index								EAN CODE
9545	5V 1A DC	2,5W	250lm	3000K/ 4000K/ 6500K	60°	100 x 25 x 160 mm Cable length: 800 mm	ABS	5 904703 021094 >

Lampy LED akumulatorowe
Rechargeable LED lamps
Wiederaufladbare LED-Lampen
Újratölthető LED lámpák

LED	120°	IP20

Rino



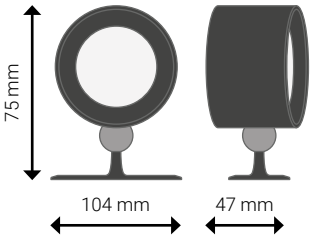



Index							EAN CODE
9529	5V DC	1W	180lm	3000K/ 4000K/ 6500K	75 x 47 x 104 mm Cable length: 500 mm	ABS+PC	5 904703 021063 >

Stick

PIR
motion sensor



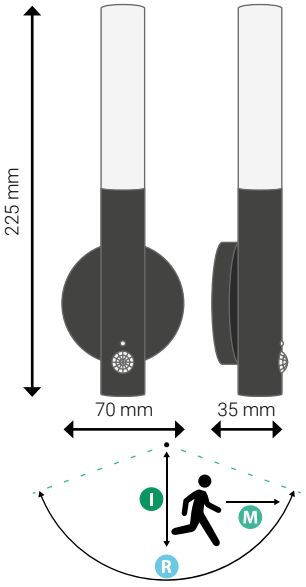

I Installation height: max. 4-6 m
M Motion detection: <2m/s
R Detection range: ≤120°



Index									EAN CODE
9543	5V 1A DC	2,5W	250lm	4000K	20s	4-6 m	35-40lux	70 x 35 x 225 mm Cable length: 800 mm	ABS+PS	5 904703 021070 >

lvt.com.pl

LED	20s	4-6 m	35-40lux	IP20

Pixo LED

PIR
motion sensor



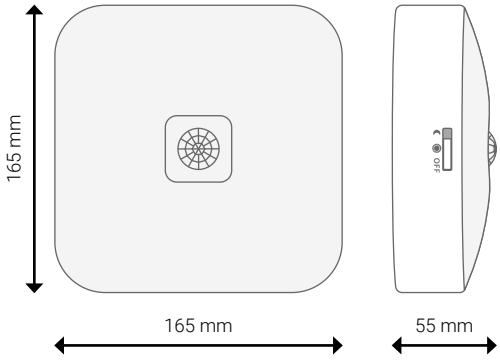

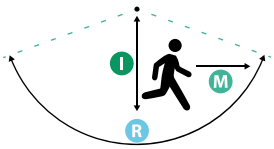

I Installation height: max. 4-6 m
M Motion detection: <2 m/s
R Detection range: ≤120°

Index								EAN CODE
9544	5V 1A DC	5W	500lm	4000K	120°	165 x 165 x 55 mm Cable length: 800 mm	ABS	5 904703 021087 >



LED
SMD

Karaoke portable speaker

LED RGB



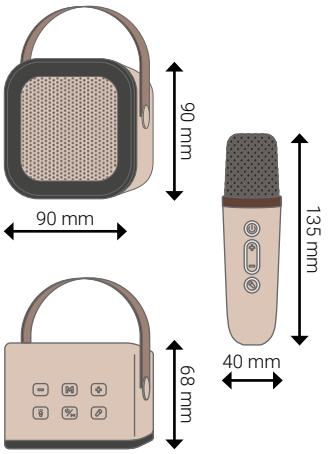



bluetooth speaker

USB A, micro SD, bluetooth

MP3 file support

Index										EAN CODE
8979	5V 1A	2W	500mah/3,7V	160lm	RGB IC	90 x 68 x 90 mm USB-C cable length: 1 m	ABS	Beige + brown	IP20	5 904703 017639 >

Bath duck

LED RGB



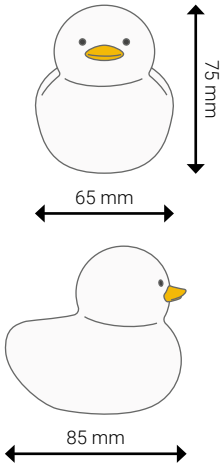

tap / squeeze control
soft silicone surface

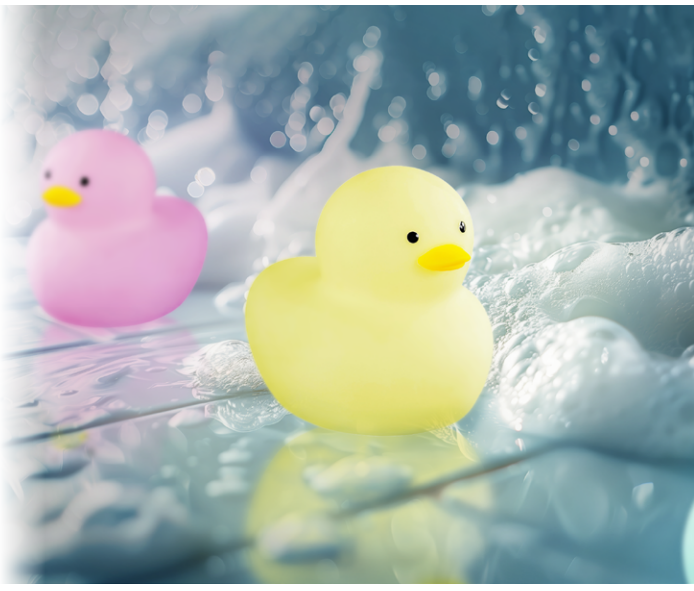

Index									EAN CODE
9004	0,4W	2x CR2032(3V) *included	1lm	RGB	65 x 85 x 75 mm	Silikon + ABS + HIPS	White	IP67	5 904703 017752 >

LVT lvt.com.pl
VIP ELECTRO.PL
master LED
XUDO

5V 1A	2,5W	LED SMD	RGB + 3000K	Silikon + ABS +HIPS	IP20



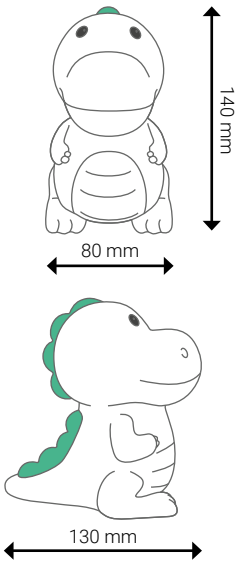

Dinosaur

LED RGB DIMM



Index						EAN CODE
8687	1200mah/3,7V	25lm	80 x 130 x 140 mm	USB-C 50 cm *included	White	5 904703 014744 >



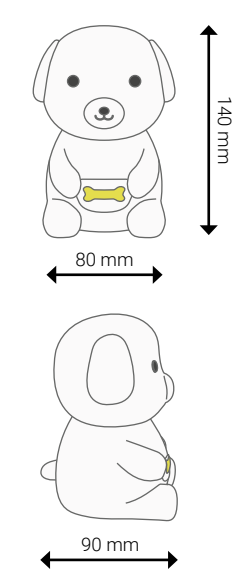

Dog

LED RGB DIMM



Index						EAN CODE
8688	1200mah/3,7V	18lm	80 x 90 x 140 mm	micro USB 50 cm *included	White	5 904703 014751 >

Lampy dziecięce LED
Children's LED lamps
LED-Kinderlampen
LED-es gyereklámpák

5V 1A	LED SMD	Silikon + ABS + HIPS	IP20

Bunny



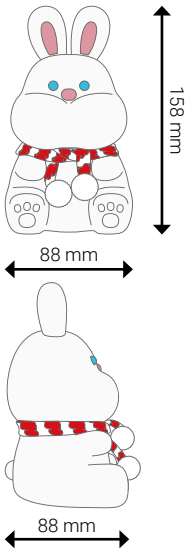

tap / squeeze control
soft silicone surface



Index								EAN CODE
9000	1200mah/3,7V	1,5W	28lm	RGB + 3000K	88 x 88 x 158 mm	USB-C 50 cm *included	White	5 904703 017707 >

Chicken



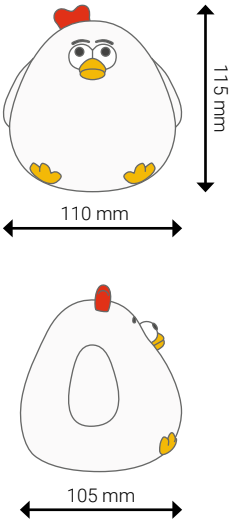

tap / squeeze control
soft silicone surface



Index								EAN CODE
9001	800mah/3,7V	1W	17lm	3000K	110 x 105 x 115 mm	USB-C 50 cm *included	White	5 904703 017714 >

5V 1A	LED SMD	Silikon + ABS + HIPS	IP20

Lampy dziecięce LED
Children's LED lamps
LED-Kinderlampen
LED-es gyereklámpák



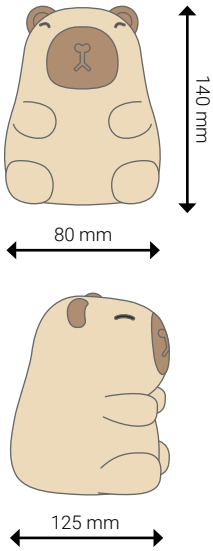

Capybara

LED RGB DIMM

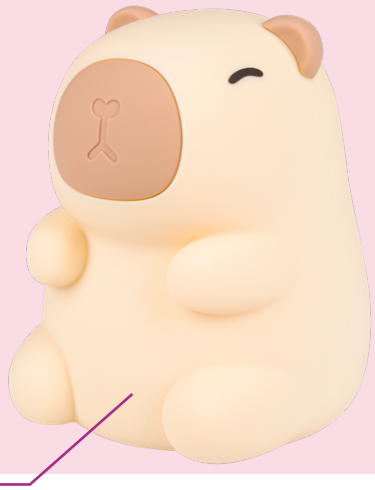

tap / squeeze control
soft silicone surface

Index								EAN CODE
9005	1200mah/3,7V	2,5W	18lm	RGB + 3000K	80 x 125 x 140 mm	USB-C 50 cm *included	Brown	5 904703 017745 >



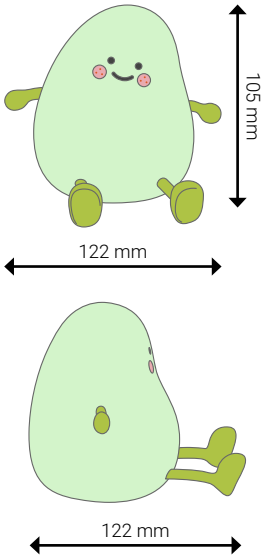

Mango

LED DIMM

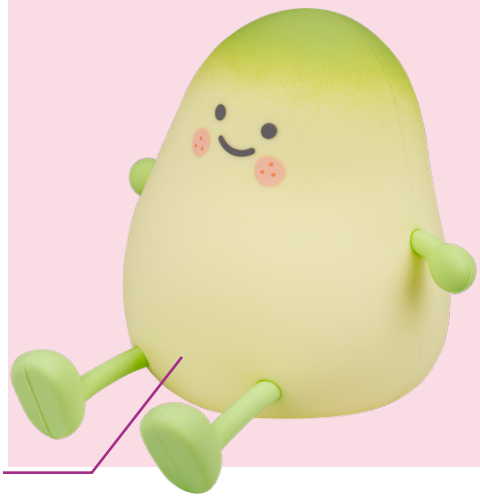

tap / squeeze control
soft silicone surface

Index								EAN CODE
9003	800mah/3,7V	1W	15lm	3000K	122 x 122 x 105 mm	USB-C 50 cm *included	Green	5 904703 017738 >

5V 1A	LED SMD + laser	ABS	IP20

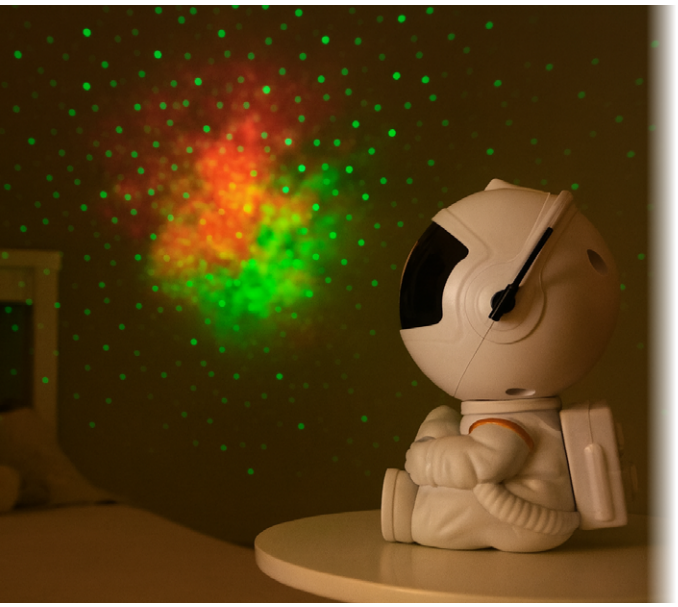

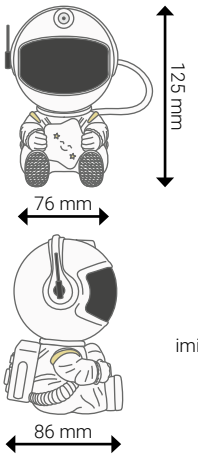

Astro 125 mm



Index						EAN CODE
8973	5W	RGB	76 x 86 x 125 mm	USB-A 100 cm *included	White	5 904703 017592 >

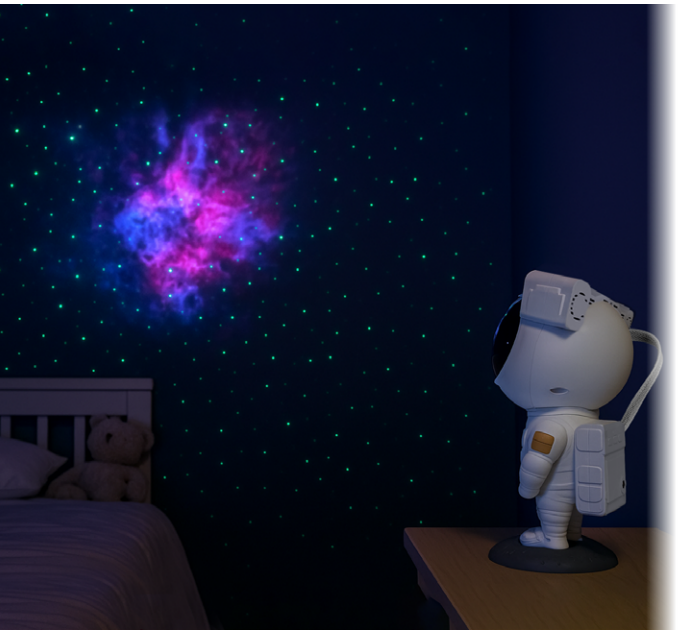

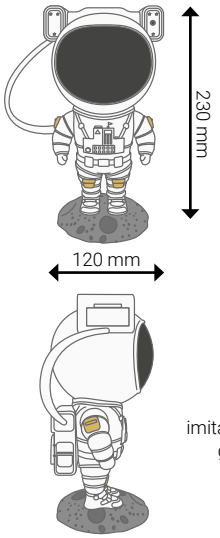

Astro 230 mm



Index						EAN CODE
8976	5W	RGB	120 x 110 x 230 mm	USB-A 100 cm *included	White	5 904703 017608 >

Żarówki LED
LED light bulbs
LED-Glühbirnen
LED izzók



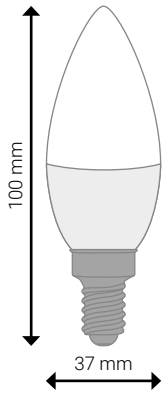

SMD 2835	170-265V AC 50/60HZ	E14	C37	IP20	270°

Index					EAN CODE
1240	2700K	5W	400lm	Ø37 x 100 mm	5 908263 384859 >
2244	4000K				5 908263 384866 >
0761	6200K				5 908263 384873 >
3275	2700K	8W	710lm	Ø37 x 100 mm	5 908263 380035 >
3277	4000K				5 908263 380042 >
3284	6500K				5 908263 380059 >



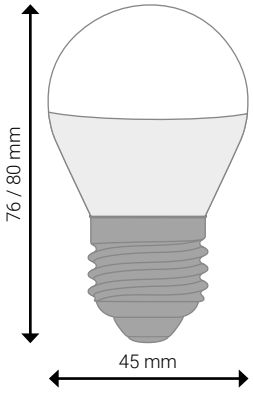

SMD 2835	170-265V AC 50/60HZ	E27	G45	IP20	180°

Index					EAN CODE
3802	2700K	5W	400lm	Ø45 x 76 mm	5 903002 032978 >
3806	4000K				5 903002 032985 >
2243	6200K				5 908263 384835 >
4444	2700K	8W	710lm	Ø45 x 80 mm	5 908263 382305 >
5465	4000K				5 908263 382312 >
3329	6200K				5 908263 384842 >

SMD 2835	170-265V AC 50/60HZ	E27	A60	IP20	240°

Index					EAN CODE
2911	2700K	8W	710lm	Ø60 x 108 mm	5 903002 036907 >
2913	4000K				5 908263 380110 >
2918	6200K				5 908263 380103 >
2914	2700K	10W	940lm	Ø60 x 108 mm	5 908263 380127 >
2920	4000K				5 908263 380141 >
2968	6200K				5 908263 380134 >
3463	2700K	12W	1160lm	Ø60 x 110 mm	5 903002 032954 >
3470	4000K				5 903002 032961 >
7439	6200K				5 908263 387874 >
3020	2700K	16W	1490lm	Ø60 x 123 mm	5 908263 380172 >
3026	4000K				5 908263 380158 >
3025	6200K				5 908263 380165 >



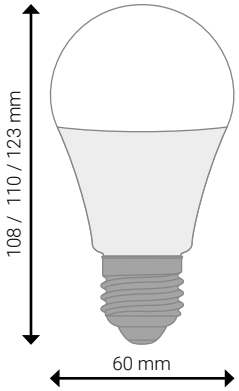

SMD 2835	176-264V AC 50/60HZ	E27	A60	IP20	220°



Index								EAN CODE
1356	9W	900lm	4000K	30s	10 m	20lux	Ø60 x 108 mm	5 904703 001935 >
1357	11W	1055lm	3000K				Ø60 x 123 mm	5 904703 001942 >
1358			4000K				Ø60 x 123 mm	5 904703 001959 >

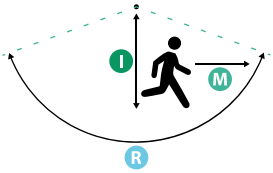

I Installation height: max. 4-6 m
M Motion detection: <4 m/s
R Detection range: 150°-170°

Żarówki LED
LED light bulbs
LED-Glühbirnen
LED izzók



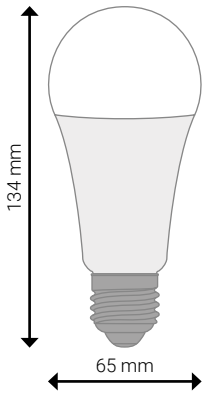

SMD 2835	170-265V AC 50/60HZ	E27	A65	IP20	240°

Index					EAN CODE
3433	2700K	18W	1820lm	Ø65 x 134 mm	5 903002 033142 >
3434	4000K				5 903002 033135 >
7440	6200K				5 908263 387881 >



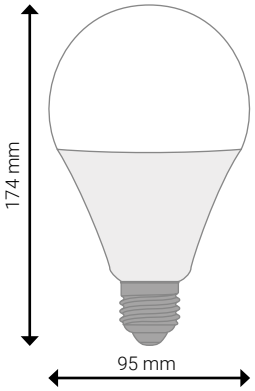

SMD 2835	170-265V AC 50/60HZ	E27	A95	IP20	270°

Index					EAN CODE
7494	2700K	24W	2500lm	Ø95 x 174 mm	5 908263 387911 >
7495	4000K				5 908263 387928 >
7496	6200K				5 908263 387935 >

SMD 2835	170-265V AC 50/60HZ	GU10	Ø50 x 55 mm	IP20	120°

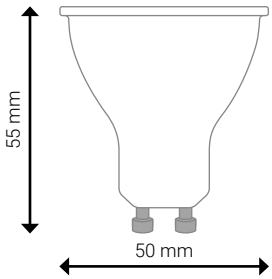

Index					EAN CODE
2407	2700K	1,5W	120lm	White	5 908263 384804 >
3551	4000K				5 908263 384811 >
4852	6500K				5 908263 384828 >
1373	2700K	3W	250lm	White	5 903002 032770 >
1372	4000K				5 903002 032787 >
1581	2700K	4,9W	392lm	White	5 904703 006213 >
3191	4000K				5 904703 006220 >
4291	6500K				5 904703 006237 >
8985	2700K			Black	5 904703 017646 >
8986	4000K				5 904703 017653 >
8987	6500K				5 904703 017660 >
2712	2700K	7W	600lm	White	5 908263 380097 >
2627	4000K				5 908263 380073 >
2877	6200K				5 908263 380080 >
2878	2700K	9W	900lm	White	5 908263 380202 >
2885	4000K				5 908263 380196 >
2887	6500K				5 908263 380189 >
8988	2700K			Black	5 904703 017677 >
8989	4000K				5 904703 017684 >
8991	6500K				5 904703 017691 >



Żarówki LED
LED light bulbs
LED-Glühbirnen
LED izzók

SMD	220-240V AC 50/60HZ	GU10	AR111	IP20	4000K



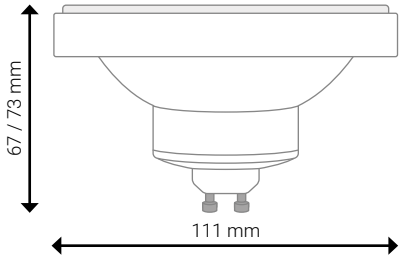

Index						EAN CODE
0282	Black	100°	12W	1160lm	Ø111 x 67 mm	5 904703 001447 >
8820	White					5 904703 015802 >
1697	Black	24°	15W	1480lm	Ø111 x 73 mm	5 904703 001430 >
6085	White		12W	1160lm		5 903002 039151 >



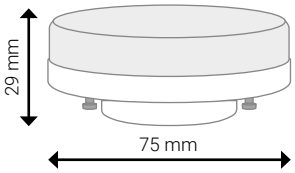

SMD	220-265V AC 50/60HZ	GX53	IP20	100°

Index					EAN CODE
9839	2700K	5W	425lm	Ø75 x 29 mm	5 904703 023388 >
9840	4000K				5 904703 023371 >
1125	6500K				5 904703 026273 >
1667	2700K	8W	720lm	Ø75 x 29 mm	5 904703 008323 >
1668	4000K				5 904703 008330 >
2883	6500K				5 904703 026280 >
1673	2700K	10W	935lm	Ø75 x 29 mm	5 904703 008347 >
1675	4000K				5 904703 008354 >
3465	6500K				5 904703 026297 >
1677	2700K	12W	1160lm	Ø75 x 29 mm	5 904703 008361 >
1689	4000K				5 904703 008378 >
6994	6500K				5 904703 026303 >

2835 SMD	220-240V AC 50/60HZ	G9	IP20





Index						EAN CODE
1725	2700K	3W	285lm	90°	Ø20,5 x 52 mm	5 904703 008538 >
1724	4000K					5 904703 008521 >
1737	2700K	5W	380lm	360°	Ø16 x 51 mm	5 904703 008422 >
1726	4000K					5 904703 008415 >
1743	2700K	8W	500lm	360°	Ø16 x 62 mm	5 904703 008446 >
1740	4000K					5 904703 008439 >
1745	2700K	10W	700lm	360°	Ø18 x 64 mm	5 904703 008460 >
1744	4000K					5 904703 008453 >

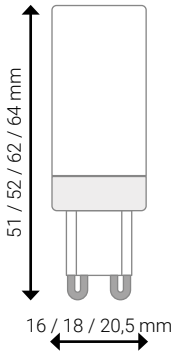

Żarówki LED
LED light bulbs
LED-Glühbirnen
LED izzók

Filament

LED

E14



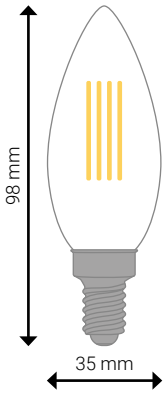

Filament COB	220-240V AC 50/60HZ	E14	IP20	360°

Index					EAN CODE
3674	4W	470lm	4000K	Ø35 x 98 mm	5 904703 013358 >
3172	6W	660lm			5 904703 013365 >
3673	8W	880lm			5 904703 013372 >
3672	10W	1100lm			5 904703 013389 >

Filament

LED

E27



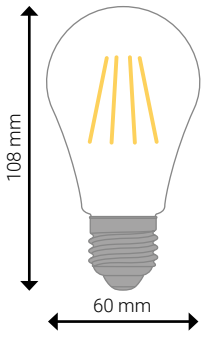

Filament COB	220-240V AC 50/60HZ	E27	A60	IP20	360°	Ø60 x 108 mm

Index					EAN CODE
0960	2200K	4W	400lm	Amber	5 908263 388536 >
0318	2700K		470lm	Clear	5 908263 388505 >
0822	2700K	6W	720lm	Clear	5 908263 388512 >
3648	4000K		720lm		5 904703 013396 >
2109	2700K	8W	880lm	Clear	5 908263 380066 >
3647	4000K				5 904703 013402 >
0834	2700K	10W	1100lm	Clear	5 908263 388529 >
3643	4000K				5 904703 013419 >
3865	4000K		1000lm	Amber	5 904703 013303 >
3637	4000K	12W	1200lm	Clear	5 904703 013310 >
9280	4000K	15W	1500lm	Clear	5 904703 018599 >

Filament COB	220-240V AC 50/60HZ	E27	G45	IP20	360°	Ø45 x 78 mm



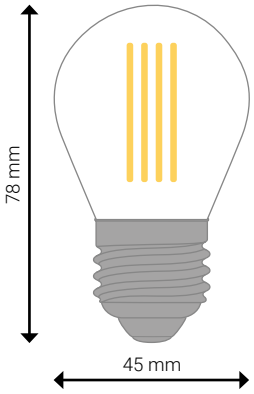

Filament LED E27



Index					EAN CODE
9278	2700K	6W	720lm	Clear	5 904703 018612 >
9279	4000K				5 904703 018605 >

Filament COB	220-240V AC 50/60HZ	E27	G80	IP20	360°	Ø80 x 120 mm



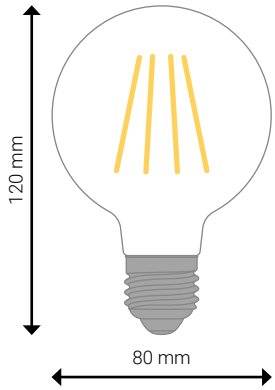

Filament LED E27



Index					EAN CODE
2235	2200K	6W	650lm	Smokey	5 908263 388604 >
2084	2700K	10W	1100lm	Clear	5 908263 388598 >

Żarówki LED
LED light bulbs
LED-Glühbirnen
LED izzók

Filament COB	220-240V AC 50/60HZ	E27	ST64	IP20	360°	Ø64 x 142 mm

Filament



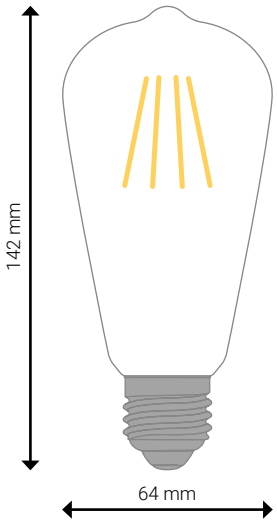



Index					EAN CODE
1811	2200K	6W	540lm	Amber	5 908263 388567 >
1896			600lm	Smokey	5 908263 388574 >
0999	2700K		720lm	Clear	5 908263 388543 >
3646	4000K		720lm		5 904703 013426 >
3638	4000K	8W	880lm	Clear	5 904703 013327 >
2017	2200K	10W	1000lm	Smokey	5 908263 388581 >
1128	2700K		1100lm	Clear	5 908263 388550 >
3163	4000K				5 904703 013433 >
3675	4000K		1000lm	Amber	5 904703 013334 >
3671	4000K	12W	1200lm	Clear	5 904703 013341 >

Filament COB	2700K	E27	ST14	IP20	360°	Clear



Filament



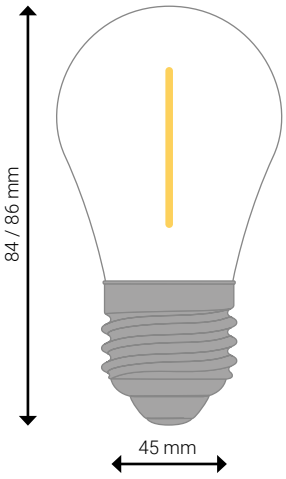



Index						EAN CODE
1322	220 - 240V AC 50/60HZ	x5	1W	100lm	Ø45 x 84 mm	5 904703 001256 >
0451		x10				5 904703 001249 >
1459		x10	2W	200lm		5 904703 001263 >
8637	24V DC	x5	1W	85lm	Ø45 x 86 mm	5 904703 014065 >

Żarówki LED
LED light bulbs
LED-Glühbirnen
LED izzók

SMD 2835	170-265V AC 50/60HZ	GU10	6W	IP20	60°

Dimm



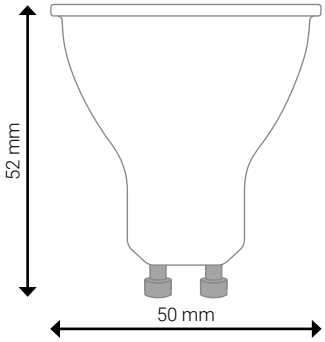

Index				EAN CODE
1791	2700K	430lm	Ø50 x 52 mm	5 904703 004776 >
1793	4000K			5 904703 004783 >

Filament COB Soft	220-240V AC 50/60HZ	E27	2200K	4W	IP20	360°

Filament Dimm





Index					EAN CODE
7721	A60	400lm	Amber	Ø60 x 108 mm	5 904703 004721 >
4125	G80	400lm	Amber	Ø80 x 120 mm	5 904703 004745 >
1790		250lm	Smokey		5 904703 004769 >
8049	G95	400lm	Amber	Ø95 x 135 mm	5 904703 004752 >
8048	ST64	400lm	Amber	Ø64 x 142 mm	5 904703 004738 >

Filament CO	220-240V AC 50/60HZ	E27	2700K	IP20	360°	3-step dimming

Filament 3-step Dimm



Index						EAN CODE
0290	G45	Clear	4W	380-470lm (20/50/100%)	Ø45 x 78 mm	5 904703 008385 >
0291	A60	Clear	6W	560-650lm (20/50/100%)	Ø60 x 108 mm	5 904703 008392 >
0295		Amber		510-600lm (20/50/100%)		5 904703 008408 >
0298	G80	Amber	6W	510-600lm (20/50/100%)	Ø80 x 120 mm	5 904703 008477 >
0301	G95	Amber	6W	510-600lm (20/50/100%)	Ø95 x 135 mm	5 904703 008484 >
0302	G125	Amber	6W	560-650lm (20/50/100%)	Ø125 x 175 mm	5 904703 008491 >
0309	ST64	Amber	6W	560-650lm (20/50/100%)	Ø64 x 142 mm	5 904703 008507 >
0310		Smokey				5 904703 008514 >

Żarówki LED
LED light bulbs
LED-Glühbirnen
LED izzók

Goliat

LED E27 E40

SMD 2835	220-240V AC 50/60HZ	E27+ E40 adapter	4000K	IP20	200°



E40 adapter

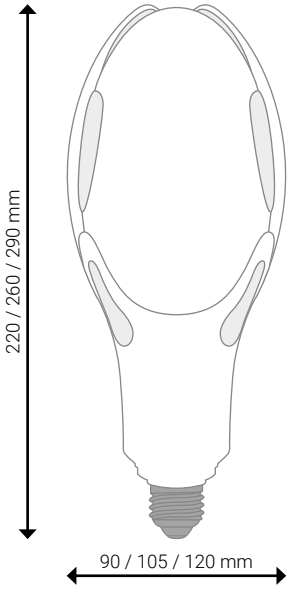



Index				EAN CODE
9855	40W	4800lm	Ø90 x 220 mm	5 904703 023494 >
9856	60W	7200lm	Ø105 x 260 mm	5 904703 023487 >
9857	80W	9600lm	Ø120 x 290 mm	5 904703 023470 >

T100

LED E27 E40

SMD 3535	170-265V AC 50/60HZ	E27+ E40 adapter	4000K	IP20	220°



E40 adapter

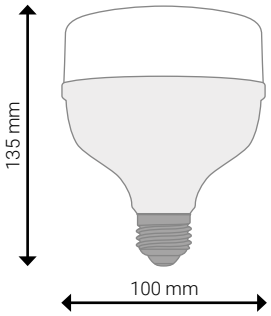



Index				EAN CODE
9845	30W	2520lm	Ø100 x 135 mm	5 904703 023500 >

SMD 2835	220-240V AC 50/60HZ	E27	A60	RGB+ 2700K - 6500K	IP20	240°



SMART TUYA app

tuya

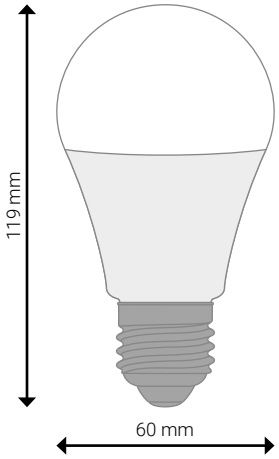

Index				EAN CODE
0746	12W	1050lm	Ø60 x 119 mm	5 908263 381247 >

WIFI RGB +WW/CW

LED RGB CCT E27



SMD 2835	220-240V AC 50/60HZ	GU10	RGB+ 2700K - 6500K	IP20	120°	



SMART TUYA app

tuya

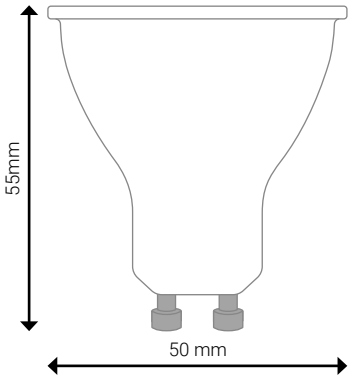

Index				EAN CODE
0814	5W	400lm	Ø50 x 55 mm	5 908263 387959 >

WIFI RGB +WW/CW

LED RGB CCT GU10



Żarówki LED
LED light bulbs
LED-Glühbirnen
LED izzók

SMD 2835	100-240V AC 50/60HZ	E27	RGB+ 2700K - 6500K	IP20	220°

Milight

LED RGB CCT E27



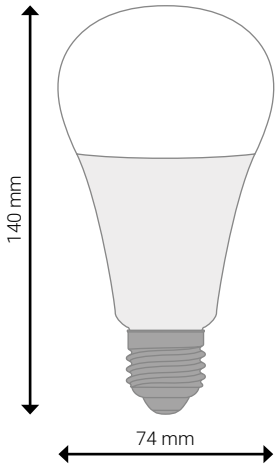



Index				EAN CODE
FUT105	12W	1080lm	Ø74 x 140 mm	6 970602 180148

Milight

LED RGB CCT GU10



SMD 2835-white 5050-RGB	100-240V AC 50/60HZ	GU10	RGB+ 2700K - 6500K	IP20	30°

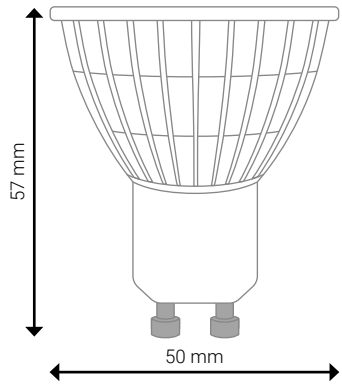



Index				EAN CODE
MLT080	4W	max. 320lm	Ø50 x 57 mm	5 904703 007128 >

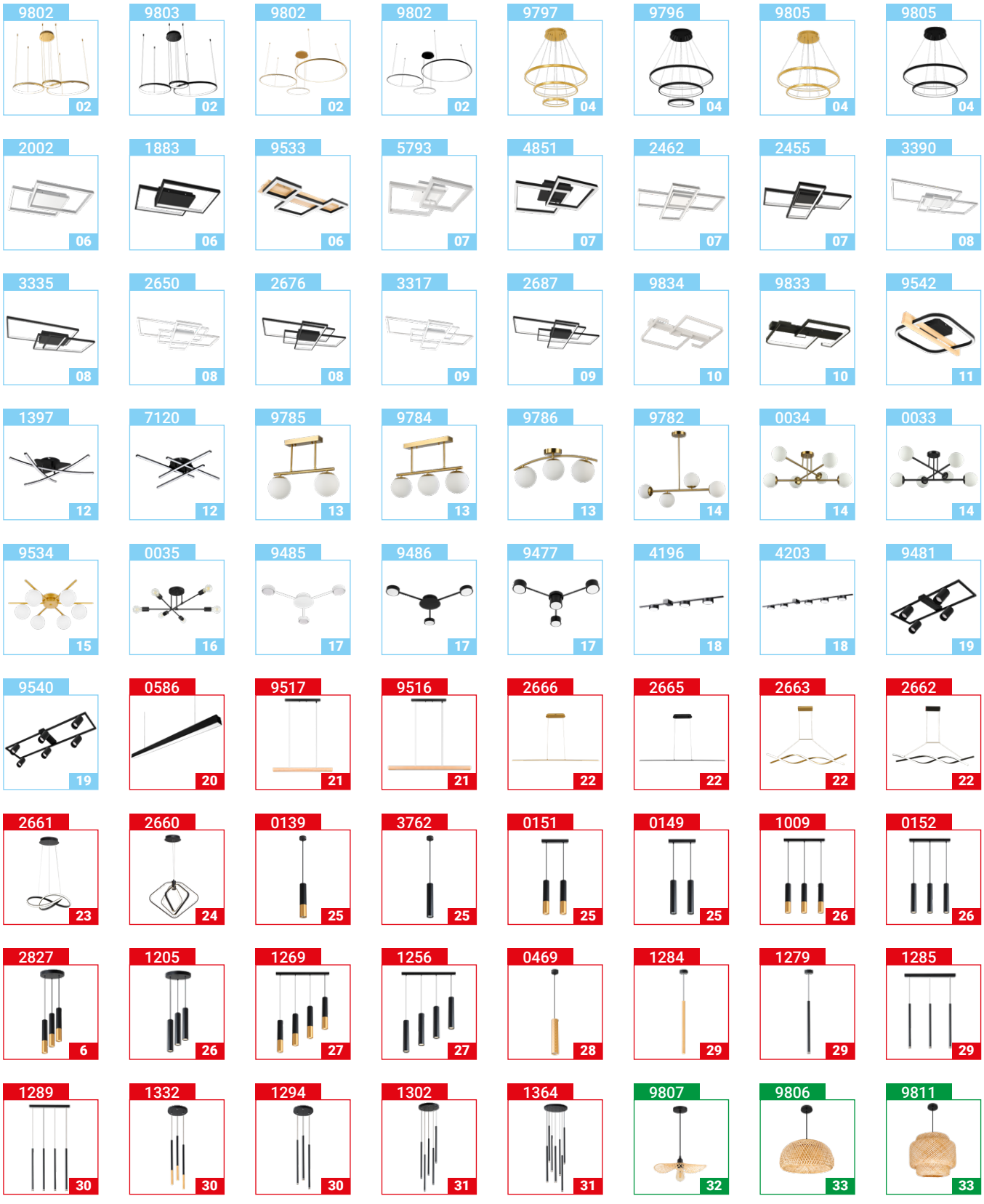
9802 02
9803 02
9802 02
9802 02
9797 04
9796 04
9805 04
9805 04
2002 06
1883 06
9533 06
5793 07
4851 07
2462 07
2455 07
3390 08
3335 08
2650 08
2676 08
3317 09
2687 09
9834 10
9833 10
9542 11
1397 12
7120 12
9785 13
9784 13
9786 13
9782 14
0034 14
0033 14
9534 15
0035 16
9485 17
9486 17
9477 17
4196 18
4203 18
9481 19
9540 19
0586 20
9517 21
9516 21
2666 22
2665 22
2663 22
2662 22
2661 23
2660 24
0139 25
3762 25
0151 25
0149 25
1009 26
0152 26
2827 6
1205 26
1269 27
1256 27
0469 28
1284 29
1279 29
1285 29
1289 30
1332 30
1294 30
1302 31
1364 31
9807 32
9806 33
9811 33

Lista produktów
List of products
Produktliste
Termékek listája


9812 34

9808 34

9781 35

9783 35

9788 36
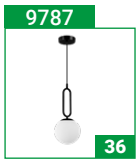
9787 36

0030 37

0029 37
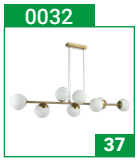
0032 37
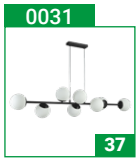
0031 37

9203 38

9205 38

9206 38

2494 38

2493 39

2492 39

3775 40

0752 40

2491 40

3963 41
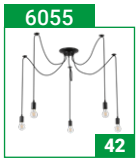
6055 42

4200 43

3964 43

0321 44

0245 44

0325 44

0323 44

0461 45

0425 45

0496 45

0465 45

2497 46

4746 46

2496 47

2495 47
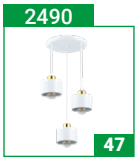
2490 47

2489 47

2483 47

9212 48

4195 48

0104 48

0118 49

0113 49

0119 49

0102 50

0110 50

0085 50

0116 50

0027 51

0026 51

4202 52

0087 52

0028 53

0096 53

0084 54

0101 54

0092 54

0112 54

0107 55

0093 55

0095 55

0115 55

0100 56

0099 56

0023 57

0025 57

0024 57

0022 58

0021 58

0121 58

0098 58

1210 59

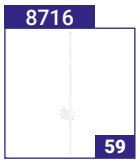
8716 59

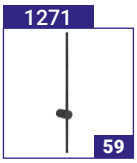
1271 59

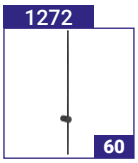
1272 60

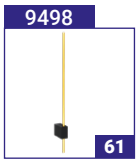
9498 61

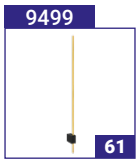
9499 61

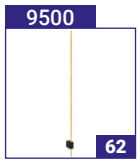
9500 62

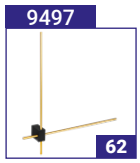
9497 62


9522 63

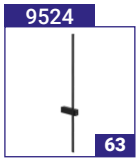
9524 63

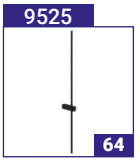
9525 64


9537 65

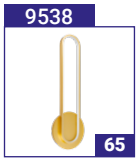
9538 65


9539 66

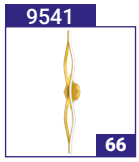
9541 66


3631 67


9197 68


4201 69


4198 69


4197 69


0122 69


0123 69


3766 70


3773 70


2377 70

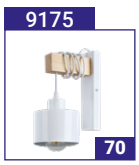
9175 70


0109 70


3769 71


3768 71


4216 71


2929 72


4213 73


3776 73


4214 73


2547 73


5237 73


3187 73


0183 74


0140 74


0502 74


0501 74

0547 75

0546 75

0134 76

0131 76

0105 76

0006 76

1671 77

1672 77

9199 78

9198 78

9200 79

9201 79

9202 80

9193 81

9192 81

9195 81

9194 81

9767 83

9196 83

3771 84

3778 84

9563 85

9561 85

9575 85

9577 85

9567 86

9573 86

3344 87

0192 88

3098 88

9732 89

9733 89

Lista produktów
List of products
Produktliste
Termékek listája

9731 89 | 9735 89 | 9736 89 | 9734 89 | 9738 90 | 9739 90 | 9737 90 | 9605 90
9503 90 | 0466 91 | 9455 91 | 9740 91 | 9465 91 | 9467 91 | 9464 91 | 9556 92
9559 92 | 9468 92 | 9611 93 | 9613 93 | 9615 94 | 4105 94 | 3404 94 | 9609 95
9607 95 | 9207 96 | 9208 96 | 9209 97 | 9210 97 | 9211 98 | 1462 99 | 4879 99
1480 99 | 6685 99 | 1359 101 | 6677 101 | 1389 101 | 1298 101 | 1417 102 | 3131 102
2529 103 | 2528 103 | 2769 104 | 2530 104 | 2771 105 | 4280 105 | 2912 106 | 2944 106
1799 107 | 1695 107 | 1707 107 | 1727 107 | 1706 108 | 1738 108 | 1812 108 | 1815 108
3289 109 | 4807 109 | 4970 110 | 4098 110 | 4356 111 | 0825 112 | 0827 112 | 1629 113
1639 113 | 1661 113 | 0932 114 | 0296 114 | 8306 114 | 0933 114 | 8704 115 | 1255 115


0468 115

0462 115

1444 116

1465 116

1365 117

1439 117

0341 118
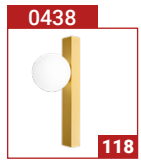
0438 118
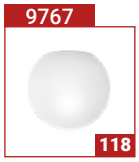
9767 118

1821 119

1739 119

7296 120

7297 120

9581 120

9579 120

9589 121

9583 121

9587 121

9597 121

9593 121

9595 121

1618 122

1620 122

2527 122

8794 123

8795 123

3755 124

3733 124

1409 124

1431 124

0552 125

8524 126

0307 126

1124 127

1088 127

0133 127

0137 127

0361 128

0380 128

2894 128

2895 128

3774 129

6534 129

2501 130

2488 130

3355 130

2502 130

2484 131

2485 131

2486 131

2487 131

9479 132

9480 132

9478 132

9601 133

9599 133

1317 134

0938 134

4348 134

1432 134

4930 135

0210 135

0612 136

0595 136

0617 136

5210 137

5207 137

5208 137

5282 137

0349 138

0350 138

1202 139

Lista produktów
List of products
Produktliste
Termékek listája

1299  139
4872  139
2891  140
3019  140
2892  140
8910 E27 Ø255mm  141
8911 E27 Ø290mm  141
1263 E27 Ø260mm  141
1630 E27 Ø300mm  141
8915 E27 Ø320mm  142
4982 E27 Ø300mm  142
4982-PC E27 Ø300mm  142
4983 12W Ø290mm  143
1126 12W Ø250mm  144
1127 18W Ø330mm  144
7133 24W Ø380mm  144
1568 24W Ø380mm  DIP 144
5692 12W Ø255mm  145
6108 18W Ø325mm  145
1445 24W Ø375mm  145
1286 12W Ø255mm  145
3358 18W Ø325mm  145
8914 max.72W Ø390mm  146
6676 22W Ø300mm  147
0737 22W Ø300mm  147
1622 18W Ø220mm  148
1624 18W Ø220mm  148
9178 12W Ø255mm  149
9132 12W Ø255mm  149
9179 18W Ø275mm 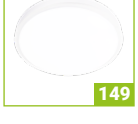 149
9134 18W Ø275mm  149
9180 24W Ø325mm  149
9135 24W Ø325mm  149
9138 18W 275x275mm  149
9183 18W Ø275mm  150
9136 18W Ø275mm  150
9181 18W Ø275mm  DIP 150
9170 18W Ø275mm  DIP 150
9182 24W Ø325mm  150
9137 24W Ø325mm  150
9184 24W Ø325mm DIP 150
9171 24W Ø325mm DIP 150
8907 E27 Ø305mm 151
8906 E27 Ø305mm 151
8909 E27 Ø305mm DIP 151
8908 E27 Ø305mm DIP 151
8903 E27 305x305mm 152
8902 E27 305x305mm 152
8905 E27 305x305mm DIP 152
8904 E27 305x305mm DIP 152
6568 E27 Ø330mm 153
1117 E27 Ø330mm 153
3452 E27 Ø330mm DIP 153
7332 E27 Ø330mm DIP 153
0251 E27 270x270mm 154
2751 E27 270x270mm 154
3726 E27 270x270mm DIP 154
7331 E27 270x270mm DIP 154
0561 18W Ø270mm 155
0562 24W Ø340mm 155
0563 36W Ø390mm 155
0621 18W Ø340mm DIP 155
0566 18W Ø340mm 155
0564 36W 390x390mm 156
8735 90W Ø780mm 157
1450 24W 335x335mm 158
3229 30W 440x440mm 158
3234 max. 72W 430x430mm 159
1570 24W Ø390mm 160
4043 24W Ø390mm 161
2967 max. 36W 530x530mm 162
0214 max.48W Ø390mm 163

LVT lvt.com.pl VIP ELECTRO.PL master LED XUDO


4049
max.72W Ø490mm
163

7569
max.72W Ø500mm
163

1277
max.72W Ø500mm
164

7941
max.48W Ø400mm
165

7234
max.72W Ø500mm
165

9285
max.36W Ø480mm
166

8618
max.36W Ø480mm
166

8608
max.40W Ø600mm
166

9287
max.36W Ø400mm
166

9789
24W Ø145mm
167
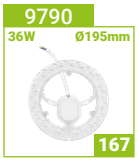
9790
36W Ø195mm
167
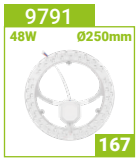
9791
48W Ø250mm
167

8856
6W Ø112mm
169

8865
12W Ø169mm
169

8857
12W Ø169mm
169

8866
48W Ø216mm
169

8858
18W Ø216mm
169

8859
24W Ø285mm
169

8860
6W 110x110mm
170

8867
12W 165x165mm
170

8861
12W 165x165mm
170

8868
18W 210x210mm
170

8862
18W 210x210mm
170

8863
24W 285x285mm
170

8878
6W Ø126mm
171

8869
12W Ø169mm
171

8895
12W Ø169mm
171

8881
12W Ø169mm
171

8884
12W Ø169mm
171
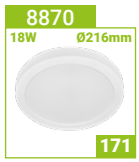
8870
18W Ø216mm
171

8896
18W Ø216mm
171

8882
18W Ø216mm
171

8885
18W Ø216mm
171

8871
24W Ø285mm
171

8898
24W Ø285mm
171

8883
24W Ø285mm
171

8887
24W Ø285mm
171

8886
6W 110x110mm
173

8874
12W 165x165mm
173

8899
12W 165x165mm
173

8888
12W 165x165mm
173

8892
12W 165x165mm
173

8876
18W 210x210mm
173

8900
18W 210x210mm
173

8890
18W 210x210mm
173

8893
18W 210x210mm
173

8877
24W 285x255mm
173

8901
24W 285x255mm
173

8891
24W 285x255mm
173

8894
24W 285x255mm
173

1477
12W Ø155mm
174

1002
12W Ø155mm
174

1479
18W Ø210mm
174

1146
18W Ø210mm
174

5910
12W Ø155mm
174

1185
12W Ø155mm
174

8437
18W Ø210mm
174

0866
18W Ø210mm
174

5797
175

4168
175

5794
175

1657
176

1701
176

1705
176

2937
177

0553
17

4167
177

1720
178

2468
179

1864
179

4037
179

0293
180

Lista produktów
List of products
Produktliste
Termékek listája

















































































12W E27 A60 — 3463 (2700K) 3470 (4000K) 7439 (6200K) — 209

16W E27 A60 — 3020 (2700K) 3026 (4000K) 3025 (6200K) — 209

9W E27 A60 — 1356 (4000K) — 209

11W E27 A60 — 1357 (3000K) 1358 (4000K) — 209

18W E27 A65 — 3433 (2700K) 3434 (4000K) 7440 (6200K) — 210

24W E27 A95 — 7494 (2700K) 7495 (4000K) 7496 (6200K) — 210

1,5W GU10 — 2407 (2700K) 3551 (4000K) 4852 (6500K) — 211

3W GU10 — 1373 (2700K) 1372 (4000K) — 211

4,9W GU10 — 1581 (2700K) 3191 (4000K) 4219 (6500K) — 211

4,9W GU10 — 8985 (2700K) 8986 (4000K) 8987 (6500K) — 211

7W GU10 — 2712 (2700K) 2627 (4000K) 2877 (6500K) — 211

9W GU10 — 2878 (2700K) 2885 (4000K) 2887 (6500K) — 211

9W GU10 — 8988 (2700K) 8989 (4000K) 8991 (6500K) — 211

12W GU10 AR111 — 8820 (4000K) — 212

12W GU10 AR111 — 0282 (4000K) — 212

12W GU10 AR111 — 6085 (4000K) — 212

15W GU10 AR111 — 1697 (4000K) — 212

5W GX53 — 9839 (2700K) 9840 (4000K) 1125 (6500K) — 212

8W GX53 — 1667 (2700K) 1668 (4000K) 2883 (6500K) — 212

10W GX53 — 1673 (2700K) 1675 (4000K) 3465 (6500K) — 212

12W GX53 — 1677 (2700K) 1689 (4000K) 6994 (6500K) — 212

3W G9 — 1725 (2700K) 1724 (4000K) — 213

5W G9 — 1737 (2700K) 1726 (4000K) — 213

8W G9 — 1743 (2700K) 1740 (4000K) — 213

10W G9 — 1745 (2700K) 1744 (4000K) — 213

4W E14 — 3674 (4000K) — 214

6W E14 — 3172 (4000K) — 214

8W E14 — 3673 (4000K) — 214

10W E14 — 3672 (4000K) — 214

4W E27 A60 — 0960 (2200K) — 214

4W E27 A60 — 0318 (2700K) — 214

6W E27 A60 — 0822 (2700K) 3648 (4000K) — 214

8W E27 A60 — 2109 (2700K) 3647 (4000K) — 214

10W E27 A60 — 0834 (2700K) 3643 (4000K) — 214

10W E27 A60 — 3865 (4000K) — 214

12W E27 A60 — 3637 (4000K) — 214

Lista produktów
List of products
Produktliste
Termékek listája

15W E27 A60 9280 (4000K) 214



6W E27 G45 9278 (2700K) 9279 (4000K) 215



6W E27 G80 2235 (2200K) 215



10W E27 G80 2084 (2700K) 215



6W E27 ST64 1811 (2200K) 216



6W E27 ST64 1896 (2200K) 216



6W E27 ST64 0999 (2700K) 3646 (4000K) 216



8W E27 ST64 3638 (4000K) 216



10W E27 ST64 2017 (2200K) 216



10W E27 ST64 1128 (2700K) 3163 (4000K) 216



8W E27 ST64 3675 (4000K) 216



12W E27 ST64 3671 (4000K) 216



1W E27 ST14 1322 (2700K) x5 217



1W E27 ST14 0451 (2700K) x10 217



2W E27 ST14 1459 (2700K) x10 217



1W E27 ST14 8637 (2700K) x5 217



6W GU10 1791 (2700K) 1793 (4000K) 218



4W E27 A60 7721 (2200K) 218



4W E27 G80 4125 (2200K) 218



4W E27 G80 1790 (2200K) 218



4W E27 G95 8049 (2200K) 218



4W E27 ST64 8048 (2200K) 218



4W E27 G45 0290 (2700K) 219



6W E27 A60 0291 (2700K) 219



6W E27 A60 0295 (2700K) 219



6W E27 G80 0298 (2700K) 219



6W E27 G95 0301 (2700K) 219



6W E27 G125 0302 (2700K) 219



6W E27 ST64 0309 (2700K) 219



6W E27 ST64 0310 (2700K) 219



40W E27 + E40 adapter 9855 (4000K) 220



60W E27 + E40 adapter 9856 (4000K) 220



80W E27 + E40 adapter 9857 (4000K) 220



30W E27 + E40 adapter 9845 (4000K) 220



12W E27 A60 0746 (RGB + 2700K-6500K) 221



5W GU10 0814 (RGB + 2700K-6500K) 221







Serie produktów
Product series
Produktserien
Terméksorozat

Bali LED E27 G9

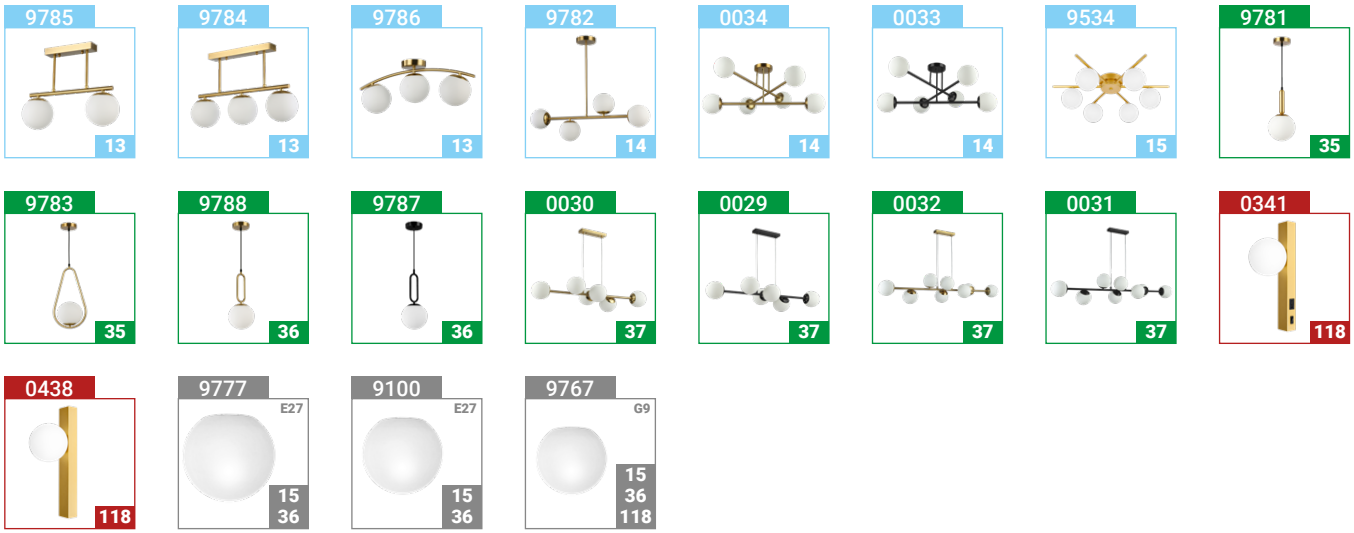

Glamour LED GU10



Serie produktów
Product series
Produktserien
Terméksorozat

Piero LED G9





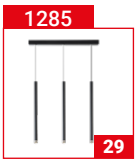

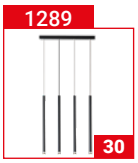

















Otto LED E27























Elen LED E27



































Stark LED E27









Elza LED E27









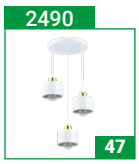

























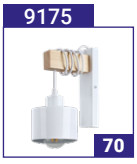























Lucerno LED GU10















Serie produktów
Product series
Produktserien
Terméksorozat

Sento LED GU10











Timo LED GU10





















Klemens LED GU10



















LVT SP. Z O.O.



DZIAŁ EXPORTU / EXPORT DEPARTMENT / EXPORTABTEILUNG / EXPORT OSZTÁLY:

Katrzyna Złotowska
katarzyna@vipelectro.pl
katarzyna@lvt.com.pl
+48 58 355 01 40
+48 501 549 346

DZIAŁ HANDLOWY – SPRZEDAŻ KRAJOWA / SALES DEPARTMENT / VERKAUFSABTEILUNG / ÉRTÉKESÍTÉSI OSZTÁLY:

Monika Wołowska
+48 58 355 01 35
handlowy@lvt.com.pl

DYREKTOR DS. SIECI HANDLOWYCH / SALES DIRECTOR FOR RETAIL NETWORKS / VERKAUFSDIREKTOR FÜR EINZELHANDELSNETZE / A KISKERESKEDELMI HÁLÓZATOK ÉRTÉKESÍTÉSI IGAZGATÓJA:

Krzysztof Szrajer
+48 515 513 365
krzysztof.szrajer@vipelectro.pl

NASZA SIEDZIBA / OUR HEADQUARTERS / UNSER HAUPTSITZ / KÖZPONTUNK

ADRES / ADDRESS / ADRESSE / CÍM

ul. Piecewska 19 80-288 Gdańsk



DYREKTOR HANDLOWY / COMMERCIAL DIRECTOR / KAUFMÄNNISCHER LEITER / KERESKEDELMI IGAZGATÓ:

Sławomir Załużny
+48 789 404 142
slawomir@vipelectro.pl

KOORDYNATOR HANDLOWCÓW REGIONALNYCH / REGIONAL SALES COORDINATOR / REGIONALER HÄNDLERKOORDINATOR / REGIONÁLIS KERESKEDŐI KOORDINÁTOR:

Regiony 1-6 / Regions 1-6 / Regionen 1-6 / Régiók 1-6
Adrianna Michalska
+48 58 355 01 36
adrianna@lvt.com.pl

DZIAŁ INWESTYCJI / INVESTMENT DEPARTMENT / ABTEILUNG INVESTITIONEN / BEFEKTETÉSI OSZTÁLY:

+48 571 447 388
inwestycje@lvt.com.pl

lvt.com.pl

Skontaktuj się z nami (HURTOWNIA):
Contact us (SALES):
Kontaktieren Sie uns (GROSSHANDEL):
Lépjen kapcsolatba velünk (NAGYKERESKEDELEM):

+48 58 500 00 20
handlowy@lvt.com.pl

